INDOOR LIGHTING

USA QuickShip program

americanlite®

We light your world™

09.12.2026

Industrial

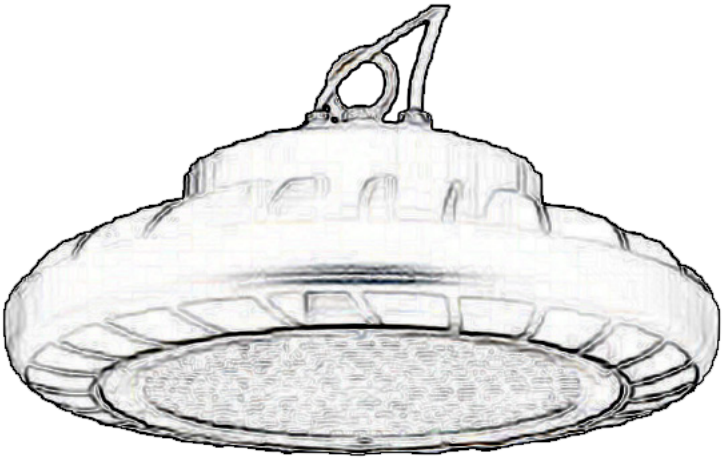

High Bay Round
High Efficiency & Sensor Read

STANDARDS

CERTIFIED | DLC LISTED PREMIUM | FCC | WET | IP65 | 6kV Surge Protection

HOUSING

- Black or white powder-coated die cast aluminum housing.

ELECTRICAL

- Operating temperature (ambient):-40°C to 40°C (-40°F to 104°F) .
- Universal 120-277V AC voltage (50-60Hz) is standard.
- 347-480V is optional (remote mount sold separately).
- 0-10VDC dimming drivers are standard.
- Emergency driver option available.
- Input transient surge protection = 6kV.
- Power Factor > 0.9.
- Total Harmonic Distortion < 20%.

OPTICAL SYSTEM

- Efficacy up to 200 Lumens per Watt (LPW) @CCT=4000K.
- Field selectable 3500K, 4000K, and 5000K color temperatures.*
- HBRHESR-302420L-3CCT Selectable output delivers from 20,306 to 29,248 nominal lumens, with 3 settings.*
- HBRHESR-474133L-3CCT Selectable output delivers from 31,830 to 46,701 nominal lumens, with 3 settings.*
- Long-life LEDs provide 204,000 hours of operation with at least 70% of initial lumen output (L70), and 61,000 hours with at least 90% of initial lumen output (L90).**
- Sensor-ready receptacle comes standard. Screw-in sensor and remote control sold separately.
- LED color maintenance <0.00018 chromaticity shift (Δu'v') over the initial 6,000 hours of operation.
- Polycarbonate lens.
- Color Rendering Index > 70.

*Factory set to 4000K CCT, and highest power output.
**L70 and L90 hours are IES TM-21-11 calculated hours.

MOUNTING

- Suspension from eyebolt (included) is standard.
- Ceiling-mounted installation using optional yoke mounting bracket, provides up to 180° of adjustability.
- Two ways to mount luminaire to electrical conduit:
  - Attach conduit (1/2" NPS) to optional yoke mounting bracket.
  - Optional pendant snap hook (for use with 3/4" NPS).

CODE COMPLIANCE

- cULus listed for wet locations.
- Premium DLC standard listed.
- Complies with FCC Part 15, Class A.
- IP65 rated for ingress protection.
- IK08 rated for Lens impact protection.

WARRANTY

- 5 year warranty on all electronics and housing.

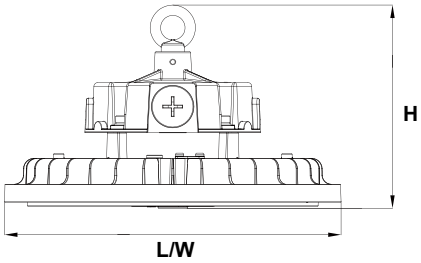

Model #	L (in)	W (in)	H (in)	Weight (lbs)
HBRHESR-302420L-3CCT	10.24	10.24	4.65	5.13
HBRHESR-474133L-3CCT	12.2	12.2	5.24	6.06

ORDERING INFORMATION

Example: HBRHESR-302420L-3CCT

Series	Nominal Lumen Output (Selectable)		Kelvin Selectable	
HBRHESR	302420L	30,000 / 24,000 / 20,000 Lumens	3CCT	3500K/4000K/5000K
	474133L	47,000 / 41,000 / 33,000 Lumens		

ACCESSORIES (ORDER SEPARATELY)

Sensor

HD09VR-PH5-1 = Passive infrared sensor - maximum mounting height = 39FT.
HD09VR-MH5-1 = Microwave occupancy sensor - maximum mounting height = 49FT.
HD05R = Remote control for HD09VR and HD07VR series (required to change factory settings)
Factory settings for Sensor : detection area =100%, hold time = 5 sec, stand-by period = 0 sec, stand by dimming level = 10%, daylight threshold = disabled, RCA

Photocell

HD07VR-A-1 = 12VDC photocell; RCA jack, factory set to Turn on at 10 lux, Turns off at 100 lux
Note: Screws into Sensor RCA receptacle that comes standard on the fixture.

Step-down Transformers

HBSD-325W-480-277 = 347-480V step-down transformer - all models

Reflector:

HBRSR-ALREF-S = 90° aluminum reflector - HBRSR-221816L-4K5K models
HBRSR-PCREF-S = 90° polycarbonate reflector - HBRSR-221816L-4K5K models
HBRSR-ALREF-L = 90° aluminum reflector - HBRSR-353024L-4K5K models
HBRSR-PCREF-L = 90° polycarbonate reflector - HBRSR-353024L-4K5K models

Mounting Option

HBRSR-YOKE-WHT = Yoke mount - all models - white
HBRSR-YOKE-BLK = Yoke mount - all models - black
LEDHBRSN-PSH-PRM-V2 = Pendant snap hook for 3/4” NPS conduit - all models

Emergency Battery Back-up

BLEM-INDRV-HBR30W = 30W Emergency Driver.
BLEM-INDRV-HBR40W = 40W Emergency Driver.
BLEM-INDRV-HBR60W = 60W Emergency Driver.

COMPATIBLE DIMMERS AND CONTROLS

Manufacturer	Model Number	Style	Dimmer Range	Load Switching Capacity
Americanlite	DWS-010V-T	Toggle	10%-100%	600W
Americanlite	DWS-010V-D	Decora	10%-100%	600W
Americanlite	GPDMLV-02-3	Toggle	10%-100%	600W
Americanlite	GPDMLV-12-3	Decora	10%-100%	600W
Leviton	IP710-LFZ	Toggle	10%-100%	1200W
Lutron	DVSTV	Decora	10%-100%	450W

LUMEN TABLES & ELECTRICAL DATA

Series	Measure-ments		30L			24L			20L		
			3500K	4000K	5000K	3500K	4000K	5000K	3500K	4000K	5000K
HBRHESR-302420L-3CCT	Lumens		27,961	29,248	28,396	23,809	24,694	24,079	20,306	21,002	20,687
	Watts		158.0	152.2	157.1	129.5	125.5	128.7	107.8	105.1	107.6
	Efficacy		177	192	181	184	197	187	188	200	192
	Input Current (A)	120V	1.32	1.27	1.31	1.08	1.05	1.07	0.90	0.88	0.90
		240V	0.66	0.63	0.65	0.54	0.52	0.54	0.45	0.44	0.45
		277V	0.57	0.55	0.57	0.47	0.45	0.46	0.39	0.38	0.39

Series	Measure-ments		47L			41L			33L		
			3500K	4000K	5000K	3500K	4000K	5000K	3500K	4000K	5000K
HBRHESR-474133L-3CCT	Lumens		44,801	46,701	45,424	39,382	40,839	39,683	31,830	32,820	32,371
	Watts		253.6	244.5	254.4	216.0	209.2	216.2	169.2	164.8	169.3
	Efficacy		177	191	179	182	195	184	188	199	191
	Input Current (A)	120V	2.11	2.04	2.12	1.80	1.74	1.80	1.41	1.37	1.41
		240V	1.06	1.02	1.06	0.90	0.87	0.90	0.71	0.69	0.71
		277V	0.92	0.88	0.92	0.78	0.76	0.78	0.61	0.59	0.61

PHOTOMETRICS

HBRHESR-302420L-3CCT

Luminaire Data

Description	High Efficacy Round High Bay Lumen/Kelvin Selectable
Total Lumens	29,248
Input Wattage	152
Efficacy (lm/W)	192
Spacing Criterion (0-180°)	1.24
Spacing Criterion (90-270°)	1.26

Photometrics calculated at 4000K and high lumen output.

Zonal Lumen Summary

Zone	Lumens	%Fixt
0-20°	5,342	18.3%
0-30°	11,397	39.0%
0-40°	18,274	62.5%
20-50°	18,374	62.8%
40-70°	10,144	34.7%
0-60°	26,836	91.8%
0-80°	29,109	99.5%
0-90°	29,248	100.0%
90-180°	0	0.0%
0-180°	29,248	100.0%

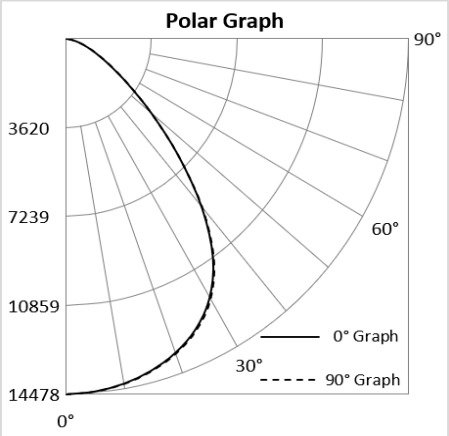

PHOTOMETRICS

HBRHESR-474133L-3CCT

Luminaire Data

Description	High Efficacy Round High Bay Lumen/Kelvin Selectable
Total Lumens	46,701
Input Wattage	244
Efficacy (lm/W)	191
Spacing Criterion (0-180°)	1.32
Spacing Criterion (90-270°)	1.34

Photometrics calculated at 4000K and high lumen output

Zonal Lumen Summary

Zone	Lumens	%Fixt
0-20°	8,788	18.8%
0-30°	18,985	40.7%
0-40°	30,790	65.9%
20-50°	30,218	64.7%
40-70°	14,676	31.4%
0-60°	43,334	92.8%
0-80°	46,401	99.4%
0-90°	46,633	99.9%
90-180°	68	0.1%
0-180°	46,701	100.0%

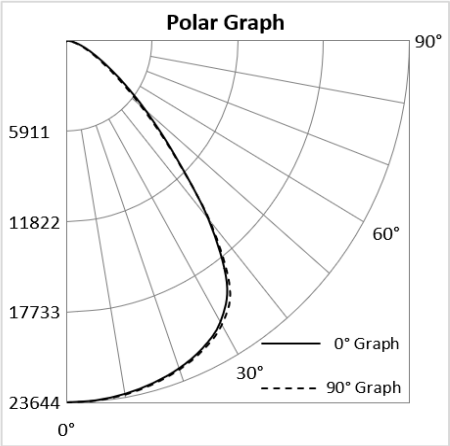

PLUGS AND CORDS

When ordering a plug, use the following suffix choices.
Example: HBRHESR-302420L-3CCT-P515
Note: Cords & Plugs do not affect the ability to install sensors.

Part number suffix	Description	For use with
P515	NEMA plug - 125V 15A	ALL MODELS
P520	NEMA plug - 125V 20A	
P515L	NEMA plug twist-lock - 125V 15A	
P520L	NEMA plug twist-lock - 125V 20A	
P615	NEMA plug - 250V 15A	
P620	NEMA plug - 250V 20A	
P615L	NEMA plug twist-lock - 250V 15A	
P620L	NEMA plug twist-lock - 250V 20A	
P715	NEMA plug - 277V 15A	
P715L	NEMA plug twist-lock - 277V 15A	
P720L	NEMA plug twist-lock - 277V 20A	

HighBay Round Sensor Ready
Lumens & Kelvin Selectable

STANDARDS

c UL us LISTED | DLC LISTED PREMIUM | FC | WET | IP65 | 6kV Surge Protection

HOUSING

- Premium powder-coat, die cast aluminum, black or white housing.

ELECTRICAL

- Operating temperature (ambient):-40°C to 50°C (-40°F to 122°F).
- Universal 120-277V AC voltage (50-60Hz) is standard.
- 347-480V achieved with step-down transformer (sold separately).
- 0-10VDC dimming drivers are standard.
- Incoming AC power cord = 6'. Incoming dimming cord = 6'.
- Watertight, compression-type electrical connectors.
- Input transient surge protection = 6kV.
- Power factor > 0.90.
- Total harmonic distortion < 20%.

OPTICAL SYSTEM

- Polycarbonate lens.
- Field selectable 4000k (neutral white) and 5000k (cool white) color temperatures*.
- Tri-lumen selectable delivers 16,000 to 35,000 nominal lumens (see lumen tables on page 3)*.
- Screw in sensor ready. Sensor and remote control sold separately. Remote control required to change factory sensor settings (see default settings on page 2).
- Long-life LEDs provide 146,000 hours of operation with at least 70% of initial lumen output (L70), and 44,000 hours with at least 90% of initial lumen output (L90)**.
- LED color maintenance < 0.003 chromaticity shift (Δu'v') over the initial 6,000 hours of operation.
- Color rendering index > 80.

* Default kelvin temperature 4000k and highest lumen output.
**L70 & L90 hours are IES TM-21-11 calculated hours.

MOUNTING

- Suspension from eyebolt (included) is standard.
- Ceiling-mounted installation using optional yoke mounting bracket, provides up to 180° of adjustability.
- Two ways to mount luminaire to electrical conduit:
  - Attach conduit (1/2" NPS) to optional yoke mounting bracket.
  - Optional pendant snap hook (for use with 3/4" NPS).

CODE COMPLIANCE

- cULus listed for wet locations.
- Premium DLC standard listed.
- Complies with FCC part 15, class A.
- IP65 rated for ingress protection.
- IK09 rated for Lens impact protection.

WARRANTY

- 5 year warranty on all electronics and housing.

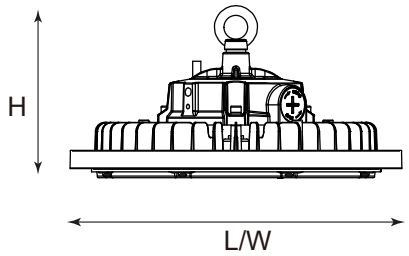

Model #	L (in)	W (in)	H (in)	Weight (lbs)
HBRSR-221816L-4K5K	10.6	10.6	5.5	3.7
HBRSR-353024L-4K5K	13	13	5.6	6

ORDERING INFORMATION

Example: HBRSR-221816L-4K5K-WHT

Series	Nominal Lumen Output (Selectable)		Kelvin Selectable	Housing Color	
HBRSR	221816L 353024L	22,000/ 18,000/ 16,000 lm 35,000/ 30,000/ 24,000lm	4K5K	BLK WHT	Black White

ACCESSORIES (ORDER SEPARATELY)

Sensor

HD07VR-PH-1	=	Passive infrared sensor - maximum mounting height = 39 FT.
HD07VR-MH-B-1	=	Microwave step-dimming sensor - maximum mounting height = 49 FT.
HD09VR-PH5-1*	=	Passive infrared sensor - maximum mounting height = 39FT.
HD09VR-MH5-1*	=	Microwave step-dimming sensor - maximum mounting height = 49FT.
HD05R	=	Remote control for HD07VR-PH-1, HD07VR-MH-B-1, HD09VR-PH5-1 & HD09VR-MH5-1(required to change factory settings).

***HD09VR series has 5-dial setting apability.**

Factory settings or Sensor : detection a ea =100%, hold time = 5 sec, tand-by period = 0 sec, stand-by dimming level = 10%, daylight threshold = disabled

Step-down Transformers

HBSD-325W-480-277	=	347-480V step-down transformer - all models

Reflec ors

HBRSR-ALREF-S	=	90° aluminum reflector - HBRSR-221816L-4K5K models
HBRSR-PCREF-S	=	90° polycarbonate reflector - HBRSR-221816L-4K5K models
HBRSR-ALREF-L	=	90° aluminum reflector - HBRSR-353024L-4K5K models
HBRSR-PCREF-L	=	90° polycarbonate reflector - HBRSR-353024L-4K5K-4K5K models

Mounting O tion

HBRSR-YOKE-WHT	=	Yoke mount - all models - white
HBRSR-YOKE-BLK	=	Yoke mount - all models - black
LEDHBRSN-PSH-PRM-V2	=	Pendant snap hook - all models

Emergency Ba ery Back-up

BLEM-INDRV-HBR30W	=	30W Emergency Driver. Emergency
BLEM-INDRV-HBR40W	=	40W Emergency Driver. Emergency
BLEM-INDRV-HBR60W	=	60W Emergency Driver. Emergency

COMPATIBLE DIMMERS AND CONTROLS

Manufacturer	Model Number	Dimmer Range	Load Switching Capacity
Americanlite	DWS-010V-T	10%-100%	600W
Americanlite	DWS-010V-D	10%-100%	600W
Leviton	IP710-LFZ	10%-100%	1200W
Lutron	DVSTV	10%-100%	450W

LUMEN TABLES

Series	Measurements	Low Lumens		Mid Lumens		High Lumens	
		4000K	5000K	4000K	5000K	4000K	5000K
HBRSR-221816L-4K5K	Lumens	15,891	15,522	18,790	18,218	22,935	21,802
	Watts	95	97	115	118	147	150
	Efficacy	168	161	163	155	156	145

Series	Measurements	Low Lumens		Mid Lumens		High Lumens	
		4000K	5000K	4000K	5000K	4000K	5000K
HBRSR-353024L-4K5K	Lumens	24,368	23,920	30,801	29,953	35,716	34,621
	Watts	146	148	192	196	229	236
	Efficacy	167	161	161	153	156	147

ELECTRICAL DATA

Series	CCT	Input Amps (A)								
		Low Lumens			Mid Lumens			High Lumens		
		120V	240V	277V	120V	240V	277V	120V	240V	277V
HBRSR-221816L-4K5K	4000K	0.79	0.40	0.34	0.96	0.48	0.42	1.23	0.61	0.53
	5000K	0.81	0.40	0.35	0.98	0.49	0.43	1.25	0.63	0.54

Series	CCT	Input Amps (A)								
		Low Lumens			Mid Lumens			High Lumens		
		120V	240V	277V	120V	240V	277V	120V	240V	277V
HBRSR-353024L-4K5K	4000K	1.22	0.61	0.53	1.60	0.80	0.69	1.91	0.95	0.83
	5000K	1.23	0.62	0.53	1.63	0.82	0.71	1.97	0.98	0.85

PHOTOMETRICS

HBRSR-221816L-4K5K

Luminaire Data	
Description	Round High Bay Lumen/Kelvin Selectable
Total Lumens	21,803
Input Wattage	150
Efficacy (lm/W)	145
Spacing Criterion (0-180°)	1.3
Spacing Criterion (90-270°)	1.28

Photometrics calculated at 5000k - high lumens setting

Zonal Lumen Summary		
Zone	Lumens	%Fixt
0-20°	4,293	19.7%
0-30°	9,222	42.3%
0-40°	14,678	67.3%
20-50°	14,029	64.3%
40-70°	6,597	30.3%
0-60°	20,287	93.0%
0-80°	21,704	99.5%
0-90°	21,803	100.0%
90-180°	0	0.0%
0-180°	21,803	100.0%

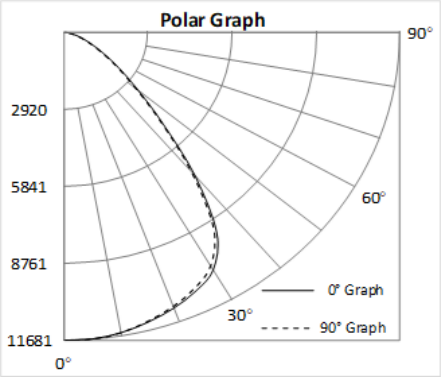

BRSR-353024L-4K5K

Luminaire Data	
Description	Round High Bay Lumen/Kelvin Selectable
Total Lumens	34,628
Input Wattage	236
Efficacy (lm/W)	147
Spacing Criterion (0-180°)	1.24
Spacing Criterion (90-270°)	1.2

Photometrics calculated at 5000k - high lumens setting

Zonal Lumen Summary		
Zone	Lumens	%Fixt
0-20°	7,096	20.5%
0-30°	14,949	43.2%
0-40°	22,917	66.2%
20-50°	21,399	61.8%
40-70°	10,642	30.7%
0-60°	31,779	91.8%
0-80°	34,413	99.4%
0-90°	34,628	100.0%
90-180°	0	0.0%
0-180°	34,628	100.0%

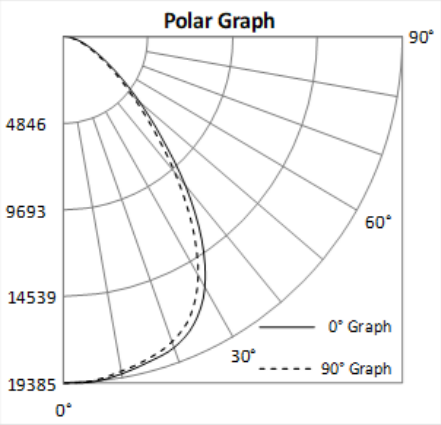

PLUGS AND CORDS

When ordering a plug, use the following suffix choices.

Example: HBRSR-181512L-4K5K-P515

Note: Cords & plugs do not affect the ability to install sensors.

Part number suffix	Description	For use with
P515	NEMA plug - 120V 15A	All models
P615	NEMA plug - 240V 15A	
P715	NEMA plug - 277V 15A	
P520	NEMA plug - 120V 20A	
P620	NEMA plug - 240V 20A	
P515L	NEMA plug twist-lock - 120V 15A	
P615L	NEMA plug twist-lock - 240V 15A	
P715L	NEMA plug twist-lock - 277V 15A	
P520L	NEMA plug twist-lock - 120V 20A	
P620L	NEMA plug twist-lock - 240V 20A	
P720L	NEMA plug twist-lock - 277V 20A	

High Bay Round - 277-480VAC Sensor-Ready Lumens & Kelvin Selectable

STANDARDS

CERTIFIED | DLC LISTED PREMIUM | FCC | WET | IP65 | 6kV Surge Protection

HOUSING

- Premium powder-coat, die cast aluminum, black or white housing.

ELECTRICAL

- Operating temperature (ambient):-40°C to 50°C (-40°F to 122°F).
- Universal 277-480V AC voltage (50-60Hz) is standard.
- 0-10VDC dimming drivers are standard.
- Consult your representative for Emergency back-up options available.
- Incoming AC power cord = 6'. Incoming dimming cord = 6'.
- Watertight, compression-type electrical connectors.
- Input transient surge protection = 6kV.
- Power factor > 0.90.
- Total harmonic distortion < 20%.

OPTICAL SYSTEM

- Polycarbonate lens.
- Field selectable 3000k (warm white), 4000k (neutral white) and 5000k (cool white) color temperatures*.
- HBRSR-221816L provides a range of 15,094 to 23,100 nominal lumens *.
- HBRSR-353024L provides a range of 22,629 to 36,442 nominal lumens *.
- Screw in sensor ready. Sensor and remote control sold separately. Remote control required to change factory sensor settings (see default settings on page 2).
- Long-life LEDs provide 167,000 hours of operation with at least 70% of initial lumen output (L70), and 51,000 hours with at least 90% of initial lumen output (L90)**.
- LED color maintenance < 0.003 chromaticity shift (Δu'v') over the initial 6,000 hours of operation.
- Color rendering index > 80.

* Default kelvin temperature 4000k and highest lumen output.
**L70 & L90 hours are IES TM-21-11 calculated hours.

MOUNTING

- Suspension from eyebolt (included) is standard.
- Ceiling-mounted installation using optional yoke mounting bracket, provides adjustable aiming.
- Two ways to mount luminaire to electrical conduit:
  - Attach conduit (1/2" NPS) to optional yoke mounting bracket.
  - Optional pendant snap hook (for use with 3/4" NPS).

CODE COMPLIANCE

- cULus listed for wet locations.
- DLC Premium listed.
- Complies with FCC part 15, class A.
- IP65 rated for ingress protection.
- IK09 rated for Lens impact protection.

WARRANTY

- 5 year warranty on all electronics and housing.

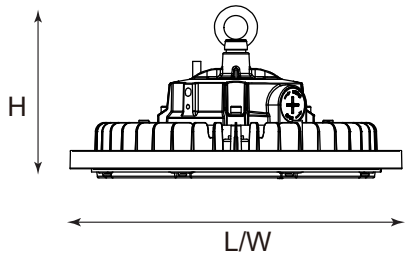

Model #	L (in)	W (in)	H (in)	Weight (lbs)
HBRSR-221816L-3CCT-UNC	11.02	11.02	5.92	5.53
HBRSR-353024L-3CCT-UNC	13.47	13.47	5.92	7.29

ORDERING INFORMATION

Example: HBRSR-221816L-3CCT-UNC-WHT

Series	Nominal Lumen Output (Selectable)		Kelvin Selectable	Voltage	Housing Color	
HBRSR	221816L 353024L	22,000/ 18,000/ 16,000 lm 35,000/ 30,000/ 24,000lm	3CCT 3000 / 4000 / 5000K	UNC 277-480V	BLK WHT	Black White

ACCESSORIES (ORDER SEPARATELY)

Sensor

HD09VR-PH5-1*	=	Passive infrared sensor - maximum mounting height = 39FT.
HD09VR-MH5-1*	=	Microwave step-dimming sensor - maximum mounting height = 49FT.
HD05R	=	Remote control for HD09VR-PH5-1 & HD09VR-MH5-1(required to change factory settings).

***HD09VR series has 5-dial setting apability.**

Factory settings or Sensor : detection a ea =100%, hold time = 5 sec, tand-by period = 0 sec, stand-by dimming level = 10%, daylight threshold = disabled

Reflec ors

HBRSR-ALREF-S	=	90° aluminum reflector - HBRSR-221816L-4K5K models
HBRSR-PCREF-S	=	90° polycarbonate reflector - HBRSR-221816L-4K5K models
HBRSR-ALREF-L	=	90° aluminum reflector - HBRSR-353024L-4K5K models
HBRSR-PCREF-L	=	90° polycarbonate reflector - HBRSR-353024L-4K5K-4K5K models

Mounting O tion

HBRSR-YOKE-WHT	=	Yoke mount - all models - white
HBRSR-YOKE-BLK	=	Yoke mount - all models - black
LEDHBRSN-PSH-PRM-V2	=	Pendant snap hook - all models

LUMEN TABLES

Series	Measure-ments	Low Lumens			Mid Lumens			High Lumens		
		3000K	4000K	5000K	3000K	4000K	5000K	3000K	4000K	5000K
HBRSR-221816L -3CCT-UNC	Lumens	15,094	16,174	15,763	17,449	19,136	18,575	20,752	23,100	22,312
	Watts	100.52	97.35	100.33	121.57	117.63	121.61	150	145.35	151.73
	Efficacy	150	166	157	144	163	153	138	159	147

Series	Measure-ments	Low Lumens			Mid Lumens			High Lumens		
		3000K	4000K	5000K	3000K	4000K	5000K	3000K	4000K	5000K
HBRSR-353024L -3CCT-UNC	Lumens	22,629	24,134	23,477	28,018	30,888	29,864	32,917	36,442	35,027
	Watts	150.45	144.55	149.36	198.83	191.82	199.99	242.67	232.27	244.33
	Efficacy	150	167	157	141	161	149	136	157	143

ELECTRICAL DATA

Series	CCT	Input Amps (A)								
		Low Lumens			Mid Lumens			High Lumens		
		277V	347V	480V	277V	347V	480V	277V	347V	480V
HBRSR-221816L -3CCT-UNC	3000K	0.36	0.29	0.21	0.44	0.35	0.25	0.54	0.43	0.31
	4000K	0.35	0.28	0.20	0.42	0.34	0.25	0.52	0.42	0.30
	5000K	0.36	0.29	0.21	0.44	0.35	0.25	0.55	0.44	0.32

Series	CCT	Input Amps (A)								
		Low Lumens			Mid Lumens			High Lumens		
		277V	347V	480V	277V	347V	480V	277V	347V	480V
HBRSR-353024L -3CCT-UNC	3000K	0.54	0.43	0.31	0.72	0.57	0.41	0.88	0.70	0.51
	4000K	0.52	0.42	0.30	0.69	0.55	0.40	0.84	0.67	0.48
	5000K	0.54	0.43	0.31	0.72	0.58	0.42	0.88	0.70	0.51

PHOTOMETRICS

HBRSR-221816L-3CCT-UNC

Luminaire Data

Description	Round High Bay - UNC Lumen/Kelvin Selectable
Total Lumens	23,100
Input Wattage	145
Efficacy (lm/W)	159
Spacing Criterion (0-180°)	1.24
Spacing Criterion (90-270°)	1.28

Photometrics calculated at 4000k - high lumens setting

Zonal Lumen Summary

Zone	Lumens	%Fixt
0-20°	4,547	19.7%
0-30°	9,744	42.2%
0-40°	15,365	66.5%
20-50°	14,548	63.0%
40-70°	6,848	29.6%
0-60°	21,164	91.6%
0-80°	22,665	98.1%
0-90°	22,771	98.6%
90-180°	329	1.4%
0-180°	23,100	100.0%

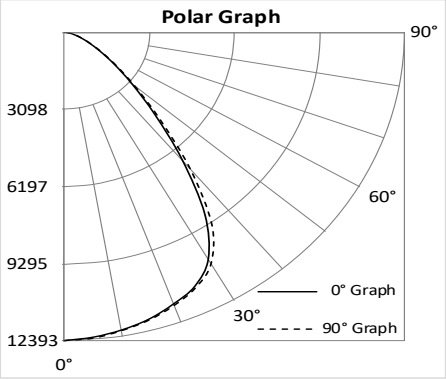

HBRSR-353024L-3CCT-UNC

Luminaire Data

Description	Round High Bay - UNC Lumen/Kelvin Selectable
Total Lumens	36,442
Input Wattage	232
Efficacy (lm/W)	157
Spacing Criterion (0-180°)	1.2
Spacing Criterion (90-270°)	1.24

Photometrics calculated at 4000k - high lumens setting

Zonal Lumen Summary

Zone	Lumens	%Fixt
0-20°	7,393	20.3%
0-30°	15,566	42.7%
0-40°	23,881	65.5%
20-50°	22,211	60.9%
40-70°	10,958	30.1%
0-60°	32,998	90.5%
0-80°	35,709	98.0%
0-90°	35,928	98.6%
90-180°	514	1.4%
0-180°	36,442	100.0%

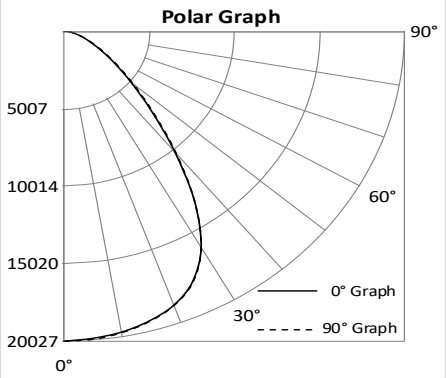

PLUGS AND CORDS

When ordering a plug, use the following suffix choices.

Example: HBRSR-221816L-3CCT-UNC-P715L

Note: Cords & plugs do not affect the ability to install sensors.

Part number suffix	Description	For use with
P715L	NEMA plug twist-lock - 277V 15A	All models
P720L	NEMA plug twist-lock - 277V 20A	
P2420L	NEMA plug twist-lock - 347V 20A	
P820L	NEMA plug twist-lock - 480V 20A	

Sensor Ready Linear High Bay Lumen & Kelvin Selectable

STANDARD

CERTIFIED | DLC LISTED PREMIUM | FC | DAMP | 6kV Surge Protection

FEATURES

- *Field selectable 4000k (neutral white) and 5000k (cool white) color temperatures.*
- *Patent-safe LEDs provide at least 134,000 hours of operation with at least 70% of initial lumen output (L_{70}), and 40,000 hours with at least 90% of initial lumen output (L_{90}).**
- *Tri-lumen selectable delivers 12,000 to 60,000 luminaire lumens (see lumen table on page 3).*
- *Screw in sensor ready (sensor sold separately).*
- *Emergency driver option available.*
- *Medium distribution is standard with optional narrow or wide distribution lenses.*
- *Universal 120-277V AC voltage (50-60Hz) is standard. 347-480V achieved with step-down transformers is optional.*
- *0-10vdc dimming drivers are standard.*
- *Power factor > 0.90.*
- *Total harmonic distortion < 20%.*
- *Color rendering index > 80.*
- *Painted steel housing (stamped) and polycarbonate lenses are standard.*
- *Wire-guards available.*

**L_{70} & L_{90} hours are IES TM-21-11 calculated hours.*

WARRANTY & LISTINGS

- *cULus listed for damp locations in ambient temperatures from -40°C to 50°C (-40°F to 122°F). HBLSR-181512L-4K5K = 55°C (131°F).*
- *DLC 5.1 premium listed for medium distribution.**
- *Input transient surge protection = 6kV.*
- *Complies with FCC Part 15, class A.*
- *5-year warranty on all electronics and housing.*

** DLC 5.1 standard listed for narrow and wide distributions.*

MOUNTING OPTIONS

- *Chain-mount kit (includes v-hooks and 1-meter-long chain) are standard.*
- *Optional pendant mounting kit provides pendant attachment to ½" rigid conduit.*
- *Optional surface mounting kit provides attachment to solid surfaces.*
- *Optional cable mount kit provides luminaire suspension.*

DIMENSIONS

Model	Size (inches)		
	L	W	H
HBLSR-181512L-4K5K	16.5	10.25	1.8
HBLSR-241815L-4K5K	23	10.25	1.8
HBLSR-363024L-4K5K	31	10.25	1.8
HBLSR-604836L-4K5K	44	10.25	1.8

ORDERING INFORMATION

Example: HBLSR-181512L-4K5K-ND-EM25

Series	Nominal Lumen Output (Selectable)		Kelvin Selectable	Input Voltage[1]		Lens Distribution		Emergency Driver	
HBLSR	181512L	18,000/15,000/12,000	4K5K	UNC	347-480V	ND	Narrow	EM25	25W emergency driver (factory installed)
	241815L	24,000/18,000/15,000		Blank	120-277V	WD	Wide	Blank	No emergency driver
	363024L	36,000/30,000/24,000				Blank	Medium		
	604836L	60,000/48,000/36,000							

[1] *UNC option not compatible with EM25 emergency driver.*

ACCESSORIES (order separately)

Sensor

HD07VR-PH-1	=	Passive infrared sensor - maximum mounting height = 39 FT, factory settings: detection area = 100%, hold time = 5 sec, stand-by period = 0 sec, stand-by dimming level = 10%, daylight threshold = disabled
HD07VR-MH-B-1	=	Microwave step-dimming sensor - maximum mounting height = 49 FT, factory settings: detection area = 100%, hold time = 5 sec, stand-by period = 0 sec, stand-by dimming level = 10%, daylight threshold = disabled
HD05R	=	Remote control for HD07VR-PH-1 & HD07VR-MH-B-1 (required to change factory settings)

Lens

HBLSR-LENS-181512L-ND	=	Narrow distribution lens for HBLSR-181512L-4K5K
HBLSR-LENS-241815L-ND	=	Narrow distribution lens for HBLSR-241815L-4K5K
HBLSR-LENS-363024L-ND	=	Narrow distribution lens for HBLSR-363024L-4K5K
HBLSR-LENS-604836L-ND	=	Narrow distribution lens for HBLSR-604836L-4K5K
HBLSR-LENS-181512L-MD	=	Medium distribution lens for HBLSR-181512L-4K5K (ships with luminaire standard)
HBLSR-LENS-241815L-MD	=	Medium distribution lens for HBLSR-241815L-4K5K (ships with luminaire standard)
HBLSR-LENS-363024L-MD	=	Medium distribution lens for HBLSR-363024L-4K5K (ships with luminaire standard)
HBLSR-LENS-604836L-MD	=	Medium distribution lens for HBLSR-604836L-4K5K (ships with luminaire standard)
HBLSR-LENS-181512L-WD	=	Wide distribution lens for HBLSR-181512L-4K5K
HBLSR-LENS-241815L-WD	=	Wide distribution lens for HBLSR-241815L-4K5K
HBLSR-LENS-363024L-WD	=	Wide distribution lens for HBLSR-363024L-4K5K
HBLSR-LENS-604836L-WD	=	Wide distribution lens for HBLSR-604836L-4K5K

Wire Guard

HBLSR-WG-181512L	=	Wire guard kit for HBLSR-181512L-4K5K
HBLSR-WG-241815L	=	Wire guard kit for HBLSR-241815L-4K5K
HBLSR-WG-363024L	=	Wire guard kit for HBLSR-363024L-4K5K
HBLSR-WG-604836L	=	Wire guard kit for HBLSR-604836L-4K5K

Mounting Options

HBLSR-SMK	=	Surface mount kit for HBLSR - all models (not compatible with UNC or EM25 options)
HBLSR-PMK	=	Pendant mount for HBLSR - all models (not compatible with UNC or EM25 options)
LEDFHB-CMK3	=	Cable mount kit, 3 meters long - all models
LEDFHB-CMK5	=	Cable mount kit, 5 meters long - all models

COMPATIBLE EMERGENCY DRIVERS INTERNALLY INSTALLED*

Emergency Driver Part Number	EM25	
Model	Watts	EM Lumens
HBLSR-181512L-4K5K	25	3750
HBLSR-241815L-4K5K	25	3750
HBLSR-363024L-4K5K	25	3750
HBLSR-604836L-4K5K	25	3750

* Suitable for ambient temperatures above 0°C (32°F).

COMPATIBLE DIMMERS & CONTROLS

Americanlite	Model Number	Dimming Range	Load Switching Capacity
Americanlite	DWS-010V-T	10%-100%	600W
Americanlite	DWS-010V-D	10%-100%	600W
Leviton	IP710-LFZ	10%-100%	1200W
Lutron	DVSTV	10%-100%	450W

ELECTRICAL DATA

Series	Measurements	Low Lumens		Mid Lumens		High Lumens	
		4000K	5000K	4000K	5000K	4000K	5000K
HBLSR-181512L-4K5K	Lumens	12,007	12,307	14,555	15,071	18,085	18,421
	Watts	76	77	96	98	120	123
	Efficacy	158	159	152	154	150	150
	Input Current (A)	120V = 0.63A	120V = 0.64A	120V = 0.80A	120V = 0.82A	120V = 1.00A	120V = 1.03A
		240V = 0.32A	240V = 0.32A	240V = 0.40A	240V = 0.41A	240V = 0.50A	240V = 0.51A
		277V = 0.27A	277V = 0.28A	277V = 0.35A	277V = 0.35A	277V = 0.43A	277V = 0.44A

Series	Measurements	Low Lumens		Mid Lumens		High Lumens	
		4000K	5000K	4000K	5000K	4000K	5000K
HBLSR-241815L-4K5K	Lumens	15,021	15,557	18,017	18,477	24,047	24,241
	Watts	94	96	115	117	158	158
	Efficacy	159	162	157	158	152	153
	Input Current (A)	120V = 0.78A	120V = 0.80A	120V = 0.96A	120V = 0.98A	120V = 1.32A	120V = 1.32A
		240V = 0.39A	240V = 0.40A	240V = 0.48A	240V = 049A	240V = 0.66A	240V = 0.66A
		277V = 0.34A	277V = 0.35A	277V = 0.42A	277V = 0.42A	277V = 0.57A	277V = 0.57A

Series	Measurements	Low Lumens		Mid Lumens		High Lumens	
		4000K	5000K	4000K	5000K	4000K	5000K
HBLSR-363024L-4K5K	Lumens	24,049	24,854	30,037	30,299	35,517	36,076
	Watts	152	155	193	197	237	242
	Efficacy	158	160	156	154	150	149
	Input Current (A)	120V = 1.27A	120V = 1.29A	120V = 1.61A	120V = 1.64A	120V = 1.98A	120V = 2.02A
		240V = 0.63A	240V = 0.65A	240V = 0.80A	240V = 0.82A	240V = 0.99A	240V = 1.01A
		277V = 0.55A	277V = 0.56A	277V = 0.70A	277V = 0.71A	277V = 0.86A	277V = 0.87A

ELECTRICAL DATA

Series	Measurements	Low Lumens		Mid Lumens		High Lumens	
		4000K	5000K	4000K	5000K	4000K	5000K
HBLSR-604836L-4K5K	Lumens	37,049	38,465	48,182	49,009	60,104	61,319
	Watts	236	241	312	317	404	412
	Efficacy	157	160	154	155	149	149
	Input Current (A)	120V = 1.97A	120V = 2.01A	120V = 2.60A	120V = 2.64A	120V = 3.37A	120V = 3.43A
		240V = 0.98A	240V = 1.00A	240V = 1.30A	240V = 1.32A	240V = 1.68A	240V = 1.72A
		277V = 0.85A	277V = 0.87A	277V = 1.13A	277V = 1.14A	277V = 1.46A	277V = 1.49A

PHOTOMETRIC DATA

HBLSR-181512L-4K5K

Luminaire Data

Description	Linear High Bay Lumen/Kelvin Selectable
Total Lumens	18,423
Input Wattage	123
Efficacy (lm/W)	150
Spacing Criterion (0-180°)	1.22
Spacing Criterion (90-270°)	1.18

Photometrics calculated at 5000k - high lumens setting

Zonal Lumen Summary

Zone	Lumens	%Fixt
0-20°	3,402	18.5%
0-30°	7,155	38.8%
0-40°	11,161	60.6%
20-50°	10,840	58.8%
40-70°	6,281	34.1%
0-60°	16,247	88.2%
0-80°	18,156	98.6%
0-90°	18,423	100.0%
90-180°	0	0.0%
0-180°	18,423	100.0%

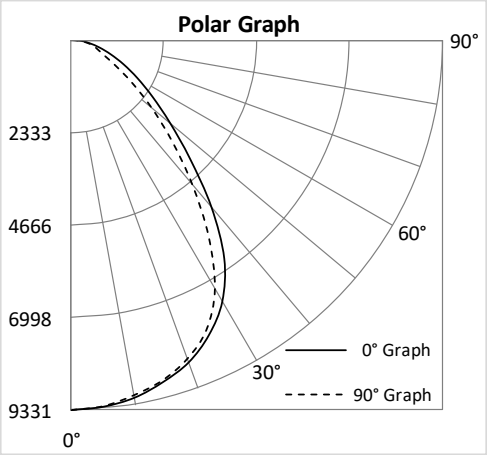

HBLSR-241815L-4K5K

Luminaire Data

Description	Linear High Bay Lumen/Kelvin Selectable
Total Lumens	24,269
Input Wattage	158
Efficacy (lm/W)	153
Spacing Criterion (0-180°)	1.24
Spacing Criterion (90-270°)	1.18

Photometrics calculated at 5000k - high lumens setting

Zonal Lumen Summary

Zone	Lumens	%Fixt
0-20°	4,468	18.4%
0-30°	9,398	38.7%
0-40°	14,661	60.4%
20-50°	14,249	58.7%
40-70°	8,283	34.1%
0-60°	21,353	88.0%
0-80°	23,902	98.5%
0-90°	24,269	100.0%
90-180°	0	0.0%
0-180°	24,269	100.0%

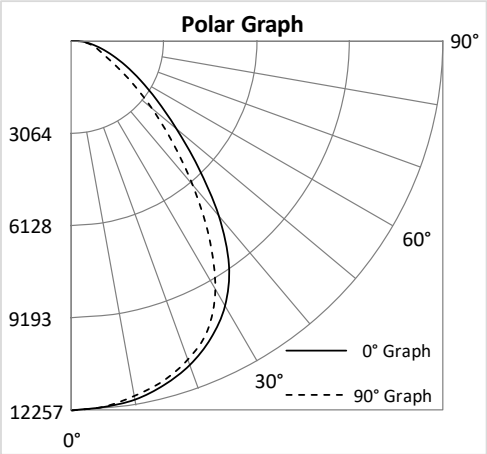

PHOTOMETRIC DATA

HBLSR-363024L-4K5K

Luminaire Data

Description	Linear High Bay Lumen/Kelvin Selectable
Total Lumens	36,087
Input Wattage	242
Efficacy (lm/W)	149
Spacing Criterion (0-180°)	1.24
Spacing Criterion (90-270°)	1.18

Photometrics calculated at 5000k - high lumens setting

Zonal Lumen Summary

Zone	Lumens	%Fixt
0-20°	6,560	18.2%
0-30°	13,802	38.2%
0-40°	21,585	59.8%
20-50°	21,143	58.6%
40-70°	12,526	34.7%
0-60°	31,718	87.9%
0-80°	35,540	98.5%
0-90°	36,087	100.0%
90-180°	0	0.0%
0-180°	36,087	100.0%

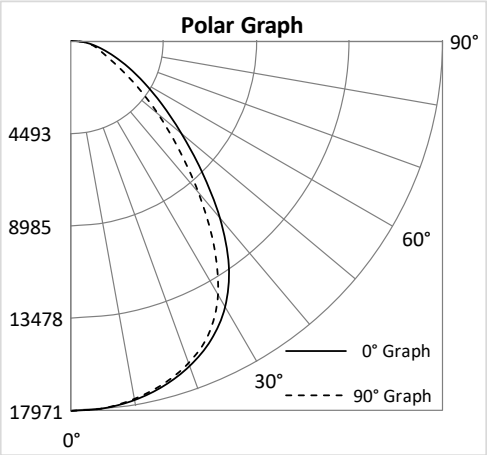

HBLSR-604836L-4K5K

Luminaire Data

Description	Linear High Bay Lumen/Kelvin Selectable
Total Lumens	61,323
Input Wattage	412
Efficacy (lm/W)	149
Spacing Criterion (0-180°)	1.24
Spacing Criterion (90-270°)	1.18

Photometrics calculated at 5000k - high lumens setting

Zonal Lumen Summary

Zone	Lumens	%Fixt
0-20°	11,100	18.1%
0-30°	23,335	38.1%
0-40°	36,491	59.5%
20-50°	35,901	58.5%
40-70°	21,535	35.1%
0-60°	53,908	87.9%
0-80°	60,446	98.6%
0-90°	61,323	100.0%
90-180°	0	0.0%
0-180°	61,323	100.0%

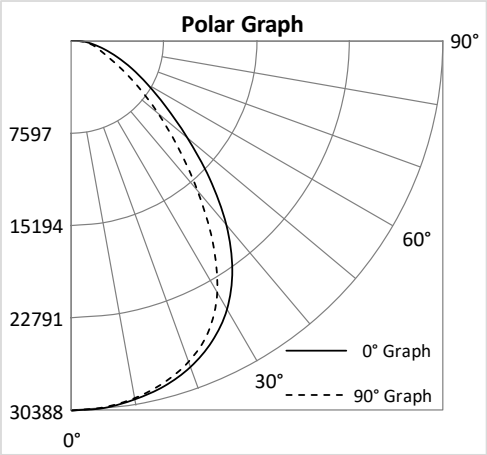

CORDS & PLUGS

- *When ordering a cord/cord & plug, use the following suffix choices.*
- *Example: HBLSR-181512L-4K5K-EM25-**10C4***
  Note: cord & plugs do not affect the ability to install sensors.

Part number suffix	Description	For use with
6C3	6' cord - 3 conductor (black/white/green)	Standard & UNC
6C4	6' cord - 4 conductor (black/white/green/red)	EM driver
6C5	6' cord - 5 conductor (black/white/green/purple/pink)	Dimming (standard & UNC)
6C6	6' cord - 6 conductor (black/white/green/red/purple/pink)	Dimming & EM driver
10C3	10' cord - 3 conductor (black/white/green)	Standard & UNC
10C4	10' cord - 4 conductor (black/white/green/red)	EM driver
10C5	10' cord - 5 conductor (black/white/green/purple/pink)	Dimming (standard & UNC)
10C6	10' cord - 6 conductor (black/white/green/red/purple/pink)	Dimming & EM driver
15C3	15' cord - 3 conductor (black/white/green)	Standard & UNC
15C4	15' cord - 4 conductor (black/white/green/red)	EM driver
15C5	15' cord - 5 conductor (black/white/green/purple/pink)	Dimming (standard & UNC)
15C6	15' cord - 6 conductor (black/white/green/red/purple/pink)	Dimming & EM driver
6W3	6' whip - 3 conductor (black/white/green)	Standard & UNC
6W4	6' whip - 4 conductor (black/white/green/red)	EM driver
6W5	6' whip - 5 conductor (black/white/green/purple/pink)	Dimming (standard & UNC)
6W6	6' whip - 6 conductor (black/white/green/red/purple/pink)	Dimming & EM driver
6P515	6' cord - 3 conductor (black/white/green) - NEMA 5-15 plug (120V/15A)	Standard luminaire
6P615	6' cord - 3 conductor (black/white/green) - NEMA 6-15 plug (240V/15A)	Standard luminaire
6P715	6' cord - 3 conductor (black/white/green) - NEMA 7-15 plug (277V/15A)	Standard luminaire
6P520	6' cord - 3 conductor (black/white/green) - NEMA 5-20 plug (120V/20A)	Standard luminaire
6P620	6' cord - 3 conductor (black/white/green) - NEMA 6-20 plug (277V/20A)	Standard luminaire
6P515L	6' cord - 3 conductor (black/white/green) - NEMA L5-15 plug (120V/15A locking)	Standard luminaire
6P615L	6' cord - 3 conductor (black/white/green) - NEMA L6-15 plug (240V/15A locking)	Standard luminaire
6P715L	6' cord - 3 conductor (black/white/green) - NEMA L7-15 plug (277V/15A locking)	Standard luminaire
6P520L	6' cord - 3 conductor (black/white/green) - NEMA L5-20 plug (120V/20A locking)	Standard luminaire
6P620L	6' cord - 3 conductor (black/white/green) - NEMA L6-20 plug (240V/20A locking)	Standard luminaire
6P720L	6' cord - 3 conductor (black/white/green) - NEMA L7-20 plug (277V/20A locking)	Standard luminaire
6P2420L	6' cord - 3 conductor (black/white/green) - NEMA L24-20 plug (347V/20A locking)	UNC luminaire
6P820L	6' cord - 3 conductor (black/white/green) - NEMA L8-20 plug (480V/20A locking)	UNC luminaire
10P515	10' cord - 3 conductor (black/white/green) - NEMA 5-15 plug (120V/15A)	Standard luminaire
10P615	10' cord - 3 conductor (black/white/green) - NEMA 6-15 plug (240V/15A)	Standard luminaire
10P715	10' cord - 3 conductor (black/white/green) - NEMA 7-15 plug (277V/15A)	Standard luminaire
10P520	10' cord - 3 conductor (black/white/green) - NEMA 5-20 plug (120V/20A)	Standard luminaire
10P620	10' cord - 3 conductor (black/white/green) - NEMA 6-20 plug (277V/20A)	Standard luminaire
10P515L	10' cord - 3 conductor (black/white/green) - NEMA L5-15 plug (120V/15A locking)	Standard luminaire
10P615L	10' cord - 3 conductor (black/white/green) - NEMA L6-15 plug (240V/15A locking)	Standard luminaire
10P715L	10' cord - 3 conductor (black/white/green) - NEMA L7-15 plug (277V/15A locking)	Standard luminaire
10P520L	10' cord - 3 conductor (black/white/green) - NEMA L5-20 plug (120V/20A locking)	Standard luminaire
10P620L	10' cord - 3 conductor (black/white/green) - NEMA L6-20 plug (240V/20A locking)	Standard luminaire
10P720L	10' cord - 3 conductor (black/white/green) - NEMA L7-20 plug (277V/20A locking)	Standard luminaire
10P2420L	10' cord - 3 conductor (black/white/green) - NEMA L24-20 plug (347V/20A locking)	UNC luminaire
10P820L	10' cord - 3 conductor (black/white/green) - NEMA L8-20 plug (480V/20A locking)	UNC luminaire
15P515	15' cord - 3 conductor (black/white/green) - NEMA 5-15 plug (120V/15A)	Standard luminaire
15P615	15' cord - 3 conductor (black/white/green) - NEMA 6-15 plug (240V/15A)	Standard luminaire
15P715	15' cord - 3 conductor (black/white/green) - NEMA 7-15 plug (277V/15A)	Standard luminaire
15P520	15' cord - 3 conductor (black/white/green) - NEMA 5-20 plug (120V/20A)	Standard luminaire
15P620	15' cord - 3 conductor (black/white/green) - NEMA 6-20 plug (277V/20A)	Standard luminaire
15P515L	15' cord - 3 conductor (black/white/green) - NEMA L5-15 plug (120V/15A locking)	Standard luminaire
15P615L	15' cord - 3 conductor (black/white/green) - NEMA L6-15 plug (240V/15A locking)	Standard luminaire
15P715L	15' cord - 3 conductor (black/white/green) - NEMA L7-15 plug (277V/15A locking)	Standard luminaire
15P520L	15' cord - 3 conductor (black/white/green) - NEMA L5-20 plug (120V/20A locking)	Standard luminaire
15P620L	15' cord - 3 conductor (black/white/green) - NEMA L6-20 plug (240V/20A locking)	Standard luminaire
15P720L	15' cord - 3 conductor (black/white/green) - NEMA L7-20 plug (277V/20A locking)	Standard luminaire
15P2420L	15' cord - 3 conductor (black/white/green) - NEMA L24-20 plug (347V/20A locking)	UNC luminaire
15P820L	15' cord - 3 conductor (black/white/green) - NEMA L8-20 plug (480V/20A locking)	UNC luminaire

DIMENSIONAL DRAWINGS

HBLSR-181512L-4K5K

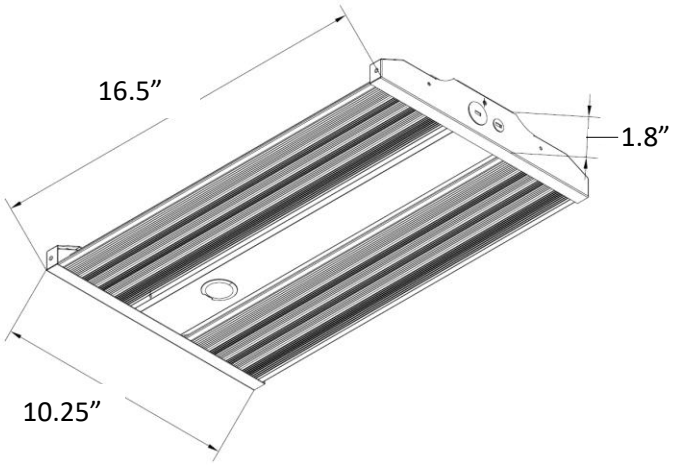

HBLSR-241815L-4K5K

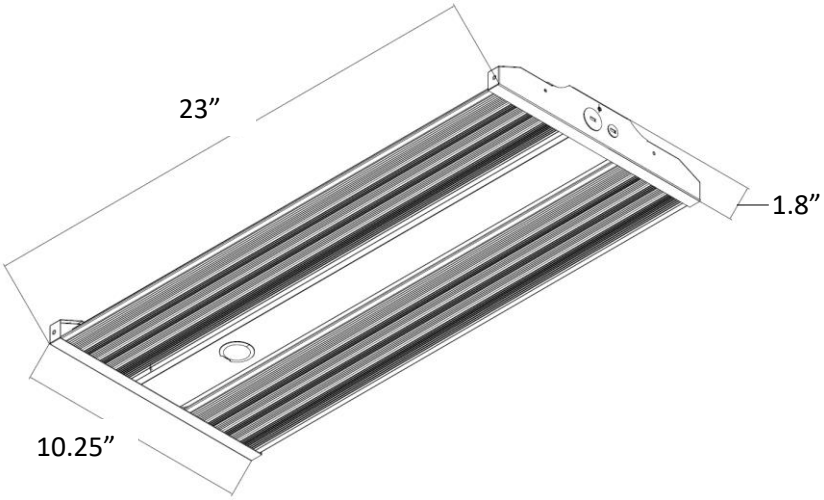

HBLSR-363024L-4K5K

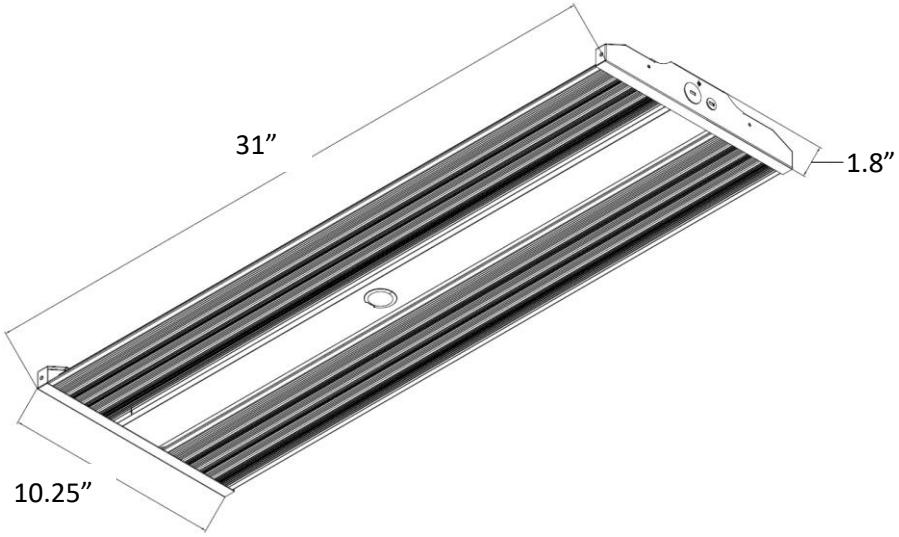

HBLSR-604836L-4K5K

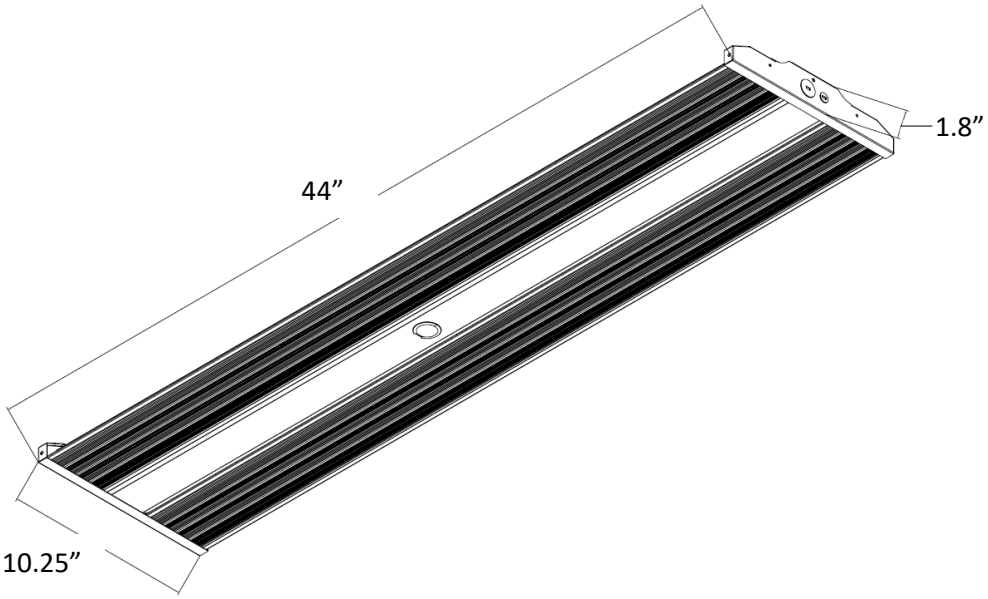

Adjustable Linear High Bay Sensor Ready Lumens & Kelvin Selectable

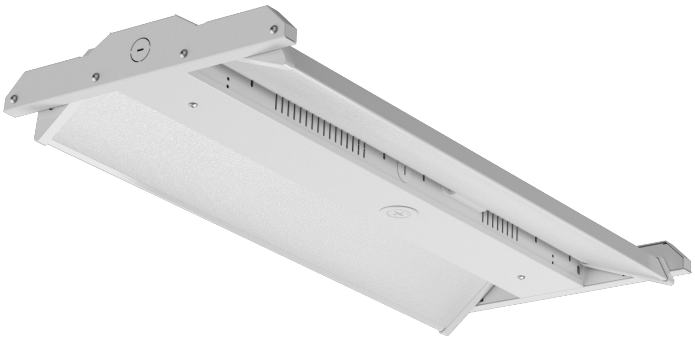

STANDARDS

c UL us LISTED | DLC LISTED PREMIUM | FC | DAMP | 6kV Surge Protection

HOUSING

- Premium powder-coat, steel, white housing.

ELECTRICAL

- Operating temperature (ambient):-40°C to 50°C (-40°F to 122°F) .
- Universal 120-277V AC voltage (50-60Hz) is standard.
- Optics rotate up to 135°.
- Screw in sensor ready. (Sensor and remote control sold separately).
- Emergency driver option available.
- 347-480v achieved with step-down transformer.
- 0-10VDC dimming drivers are standard.
- Input transient surge protection = 6kV.
- PF > 0.9; THD < 20%.

OPTICAL SYSTEM

- Polycarbonate lens.
- Field Selectable 4000k (neutral white) and 5000k (cool white) color temperatures*.
- Tri-Lumens selectable delivers 9,000 to 30,000 nominal lumens （see lumen tables on page 3)**.
- Remote Control required to change factory sensor settings (see default settings on page 2).
- Long-life LEDs provide 148,000 hours of operation with at least 70% of initial lumen output (L70), and 44,000 hours with at least 90% of initial lumen output (L90)***.
- LED color maintenance < 0.0035 chromaticity shift (Δu'v') over the initial 6,000 hours of operation.
- Color rendering index > 80%.

* Default kelvin temperature = 4000k.
** Default power setting = highest lumen output.
***L70 & L90 hours are IES TM-21-11 calculated hours.

MOUNTING

- Chain-mount kit (includes v-hooks , 1-meter long chain) are standard.
- Optional surface mounting kit provides attachment to solid surfaces*.
- Optional pendant mounting kit provides pendant attachment to 1/2" rigid conduit.

* Surface mount kit and Pendant mount kit are not compatible with the UNC StepDown Transformer option, nor the on-board, factory installed EM driver options.

CODE COMPLIANCE

- cULus listed for damp locations.
- DLC Premium listed.
- Complies with FCC part 15, class A.

WARRANTY

- 5 year warranty on all electronics and housing.

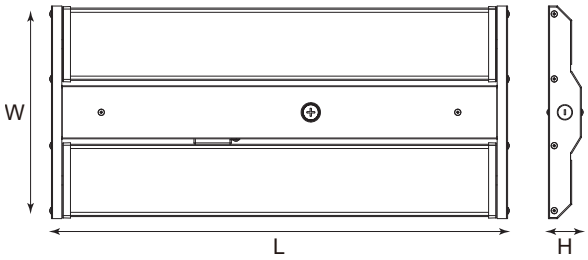

Model #	L (in)	W (in)	H (in)	Weight (lbs)
HBLASR-15129L-4K5K	25.8	12.1	1.9	7.5
HBLASR-241815L-4K5K	25.8	12.1	1.9	7.5
HBLASR-302418L-4K5K	25.8	12.1	1.9	7.5

ORDERING INFORMATION

Example: HBLASR-15129L-4K5K

Series	Nominal Lumen Output (Selectable)		Kelvin Selectable	Input Voltage	Emergency Driver
HBLASR	15129L	15,000 / 12,000 / 9,000	4K5K	UNC* 347-480V Blank 120-277V	EM10 10W Emergency Driver EM13 13W Emergency Driver EM25 25W Emergency Driver Blank No Emergency Driver
	241815L	24,000 / 18,000 / 15,000			
	302418L	30,000 / 24,000 / 18,000			

* UNC option no compatible with EM

March 5, 2024 1:29 PM

ACCESSORIES (ORDER SEPARATELY)

Sensor:

HD07VR-PH-1	=	Passive infrared sensor - maximum mounting height = 39FT, factory settings: detection area =100%, hold time = 5 sec, stand-by period = 0 sec, stand-by dimming level = 10%, daylight threshold = disabled
HD07VR-MH-B-1	=	Microwave step-dimming sensor - maximum mounting height = 49FT, factory settings: detection area =100%, hold time = 5 sec, stand-by period = 0 sec, stand-by dimming level = 10%, daylight threshold = disabled
HD05R	=	Remote control for HD07VR-PH-1 & HD07VR-MH-B-1 (required to change factory settings)

Wire Guard:

HBLASR-WGK-24x4	=	WIRE GUARD FOR ALL HBLASR MODELS

Mounting O tion

HBLASR-SMK	=	SURFACE MOUNT KIT FOR ALL HBLASR MODELS*
HBLASR-PMK	=	PENDANT MOUNT KIT FOR ALL HBLASR MODELS*

* SMK and PMK not compatible with UNC and EM drivers.

Remote Mount EM Drivers:

BLEM-CP-10C	=	10W EMERGENCY DRIVER WITH CONDUIT - EM10
BLEM-CP-13C	=	13W EMERGENCY DRIVER WITH CONDUIT - EM13

LUMEN TABLES

Series	Measurements	Low Lumens		Mid Lumens		High Lumens	
		4000k	5000k	4000k	5000k	4000k	5000k
HBLASR-15129L-4K5K	Lumens	9,935	9,886	12,681	12,531	15,819	15,495
	Watt	63.9	64.9	83.2	85.0	106.7	109.4
	Efficacy	155	152	152	147	148	142

Series	Measurements	Low Lumens		Mid Lumens		High Lumens	
		4000k	5000k	4000k	5000k	4000k	5000k
HBLASR-241815L-4K5K	Lumens	15,038	15,043	17,959	17,769	23,645	23,141
	Watt	95.21	96.61	115.38	117.13	157.28	160.36
	Efficacy	158	156	156	152	150	144

Series	Measurements	Low Lumens		Mid Lumens		High Lumens	
		4000k	5000k	4000k	5000k	4000k	5000k
HBLASR-302418L-4K5K	Lumens	19,469	19,158	25,457	24,825	31,090	30,160
	Watt	120.8	122.6	162.5	165.4	205.3	209.8
	Efficacy	161	156	157	150	151	144

ELECTRICAL DATA

Series	CCT	Input Amps (A)								
		Low Lumens			Mid Lumens			High Lumens		
		120V	240V	277V	120V	240V	277V	120V	240V	277V
HBLASR-15129L-4K5K	4000k	0.53	0.27	0.23	0.69	0.35	0.30	0.89	0.44	0.39
	5000k	0.54	0.27	0.23	0.71	0.35	0.31	0.91	0.46	0.39

Series	CCT	Input Amps (A)								
		Low Lumens			Mid Lumens			High Lumens		
		120V	240V	277V	120V	240V	277V	120V	240V	277V
HBLASR-181512L-4K5K	4000k	0.79	0.40	0.34	0.96	0.48	0.42	1.31	0.66	0.57
	5000k	0.81	0.40	0.35	0.98	0.49	0.42	1.34	0.67	0.58

Series	CCT	Input Amps (A)								
		Low Lumens			Mid Lumens			High Lumens		
		120V	240V	277V	120V	240V	277V	120V	240V	277V
HBLASR-302418L-4K5K	4000k	1.01	0.50	0.44	1.35	0.68	0.59	1.71	0.86	0.74
	5000k	1.02	0.51	0.44	1.38	0.69	0.60	1.75	0.87	0.76

PHOTOMETRICS

HBLASR-15129L-4K5K

Luminaire Data

Description	Adjustable High Bay Lumen/Kelvin Selectable
Total Lumens	15,495
Input Wattage	109
Efficacy (lm/W)	142
Spacing Criterion (0-180°)	1.24
Spacing Criterion (90-270°)	1.24

Photometrics calculated at 5000k - high lumens setting

Zonal Lumen Summary

Zone	Lumens	%Fixt
0-20°	2,114	13.6%
0-30°	4,449	28.7%
0-40°	7,199	46.5%
20-50°	7,851	50.7%
40-70°	6,974	45.0%
0-60°	12,380	79.9%
0-80°	15,208	98.2%
0-90°	15,495	100.0%
90-180°	0	0.0%
0-180°	15,495	100.0%

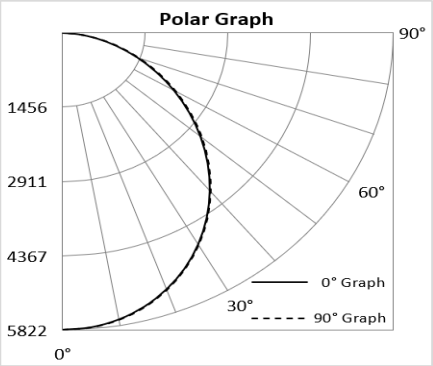

HBLASR-241815L-4K5K

Luminaire Data

Description	Adjustable High Bay Lumen/Kelvin Selectable
Total Lumens	23,141
Input Wattage	160
Efficacy (lm/W)	144
Spacing Criterion (0-180°)	1.24
Spacing Criterion (90-270°)	1.22

Photometrics calculated at 5000k - high lumens setting

Zonal Lumen Summary

Zone	Lumens	%Fixt
0-20°	3,112	13.4%
0-30°	6,559	28.3%
0-40°	10,633	45.9%
20-50°	11,637	50.3%
40-70°	10,444	45.1%
0-60°	18,367	79.4%
0-80°	22,662	97.9%
0-90°	23,111	99.9%
90-180°	30	0.1%
0-180°	23,141	100.0%

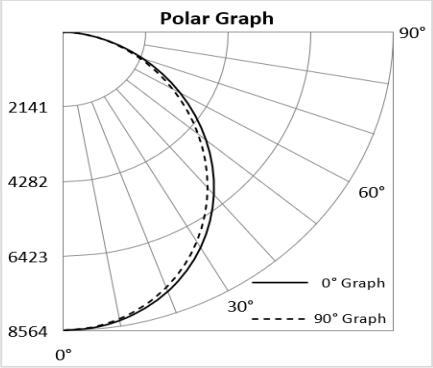

HBLASR-302418L-4K5K

Luminaire Data

Description	Adjustable High Bay Lumen/Kelvin Selectable
Total Lumens	30,160
Input Wattage	210
Efficacy (lm/W)	144
Spacing Criterion (0-180°)	1.24
Spacing Criterion (90-270°)	1.22

Photometrics calculated at 5000k - high lumens setting

Zonal Lumen Summary

Zone	Lumens	%Fixt
0-20°	4,097	13.6%
0-30°	8,625	28.6%
0-40°	13,965	46.3%
20-50°	15,249	50.6%
40-70°	13,595	45.1%
0-60°	24,055	79.8%
0-80°	29,583	98.1%
0-90°	30,160	100.0%
90-180°	0	0.0%
0-180°	30,160	100.0%

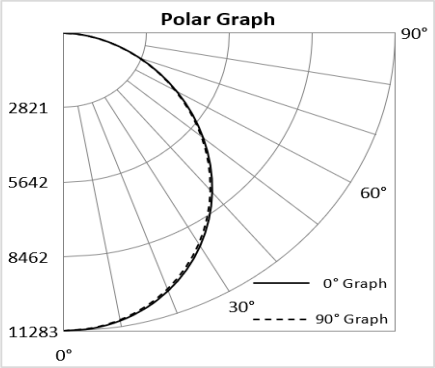

COMPATIBLE EMERGENCY DRIVERS-INSTALLED

Emergency Driver Part Number	EM10		EM13		EM25	
Model	Watts	EM Lumens	Watts	EM Lumens	Watts	EM Lumens
HBLASR-15129L-4K5K	10	1420	13	1846	25	3550
HBLASR-241815L-4K5K	10	1440	13	1872	25	3600
HBLASR-302418L-4K5K	10	1440	13	1872	25	3600

COMPATIBLE DIMMERS AND CONTROLS

Manufacturer	Model Number	Dimmer Range	Load Switching Capacity
Best Lighting	DWS-010V-T	10%-100%	600W
Best Lighting	DWS-010V-D	10%-100%	600W
Leviton	IP710-LFZ	10%-100%	1200W
Lutron	DVSTV	10%-100%	450W

PLUGS AND CORDS

Part number suffix	Description	For use with
6C3	6' cord - 3 conductor (black/white/green)	Standard & UNC
6C4	6' cord - 4 conductor (black/white/green/red)	EM driver
6C5	6' cord - 5 conductor (black/white/green/purple/pink)	Dimming (standard & UNC)
6C6	6' cord - 6 conductor (black/white/green/red/purple/pink)	Dimming & EM driver
10C3	10' cord - 3 conductor (black/white/green)	Standard & UNC
10C4	10' cord - 4 conductor (black/white/green/red)	EM driver
10C5	10' cord - 5 conductor (black/white/green/purple/pink)	Dimming (standard & UNC)
10C6	10' cord - 6 conductor (black/white/green/red/purple/pink)	Dimming & EM driver
15C3	15' cord - 3 conductor (black/white/green)	Standard & UNC
15C4	15' cord - 4 conductor (black/white/green/red)	EM driver
15C5	15' cord - 5 conductor (black/white/green/purple/pink)	Dimming (standard & UNC)
15C6	15' cord - 6 conductor (black/white/green/red/purple/pink)	Dimming & EM driver
6W3	6' whip - 3 conductor (black/white/green)	Standard & UNC
6W4	6' whip - 4 conductor (black/white/green/red)	EM driver
6W5	6' whip - 5 conductor (black/white/green/purple/pink)	Dimming (standard & UNC)
6W6	6' whip - 6 conductor (black/white/green/red/purple/pink)	Dimming & EM driver

PLUGS AND CORDS

Part number suffix	Description	For use with
6P515	6' cord - 3 conductor (black/white/green) - NEMA 5-15 plug (120V/15A)	Standard luminaire
6P615	6' cord - 3 conductor (black/white/green) - NEMA 6-15 plug (240V/15A)	Standard luminaire
6P715	6' cord - 3 conductor (black/white/green) - NEMA 7-15 plug (277V/15A)	Standard luminaire
6P520	6' cord - 3 conductor (black/white/green) - NEMA 5-20 plug (120V/20A)	Standard luminaire
6P620	6' cord - 3 conductor (black/white/green) - NEMA 6-20 plug (277V/20A)	Standard luminaire
6P515L	6' cord - 3 conductor (black/white/green) - NEMA L5-15 plug (120V/15A locking)	Standard luminaire
6P615L	6' cord - 3 conductor (black/white/green) - NEMA L6-15 plug (240V/15A locking)	Standard luminaire
6P715L	6' cord - 3 conductor (black/white/green) - NEMA L7-15 plug (277V/15A locking)	Standard luminaire
6P520L	6' cord - 3 conductor (black/white/green) - NEMA L5-20 plug (120V/20A locking)	Standard luminaire
6P620L	6' cord - 3 conductor (black/white/green) - NEMA L6-20 plug (240V/20A locking)	Standard luminaire
6P720L	6' cord - 3 conductor (black/white/green) - NEMA L7-20 plug (277V/20A locking)	Standard luminaire
6P2420L	6' cord - 3 conductor (black/white/green) - NEMA L24-20 plug (347V/20A locking)	UNC luminaire
6P820L	6' cord - 3 conductor (black/white/green) - NEMA L8-20 plug (480V/20A locking)	UNC luminaire
10P515	10' cord - 3 conductor (black/white/green) - NEMA 5-15 plug (120V/15A)	Standard luminaire
10P615	10' cord - 3 conductor (black/white/green) - NEMA 6-15 plug (240V/15A)	Standard luminaire
10P715	10' cord - 3 conductor (black/white/green) - NEMA 7-15 plug (277V/15A)	Standard luminaire
10P520	10' cord - 3 conductor (black/white/green) - NEMA 5-20 plug (120V/20A)	Standard luminaire
10P620	10' cord - 3 conductor (black/white/green) - NEMA 6-20 plug (277V/20A)	Standard luminaire
10P515L	10' cord - 3 conductor (black/white/green) - NEMA L5-15 plug (120V/15A locking)	Standard luminaire
10P615L	10' cord - 3 conductor (black/white/green) - NEMA L6-15 plug (240V/15A locking)	Standard luminaire
10P715L	10' cord - 3 conductor (black/white/green) - NEMA L7-15 plug (277V/15A locking)	Standard luminaire
10P520L	10' cord - 3 conductor (black/white/green) - NEMA L5-20 plug (120V/20A locking)	Standard luminaire
10P620L	10' cord - 3 conductor (black/white/green) - NEMA L6-20 plug (240V/20A locking)	Standard luminaire
10P720L	10' cord - 3 conductor (black/white/green) - NEMA L7-20 plug (277V/20A locking)	Standard luminaire
10P2420L	10' cord - 3 conductor (black/white/green) - NEMA L24-20 plug (347V/20A locking)	UNC luminaire
10P820L	10' cord - 3 conductor (black/white/green) - NEMA L8-20 plug (480V/20A locking)	UNC luminaire
15P515	15' cord - 3 conductor (black/white/green) - NEMA 5-15 plug (120V/15A)	Standard luminaire
15P615	15' cord - 3 conductor (black/white/green) - NEMA 6-15 plug (240V/15A)	Standard luminaire
15P715	15' cord - 3 conductor (black/white/green) - NEMA 7-15 plug (277V/15A)	Standard luminaire
15P520	15' cord - 3 conductor (black/white/green) - NEMA 5-20 plug (120V/20A)	Standard luminaire
15P620	15' cord - 3 conductor (black/white/green) - NEMA 6-20 plug (277V/20A)	Standard luminaire
15P515L	15' cord - 3 conductor (black/white/green) - NEMA L5-15 plug (120V/15A locking)	Standard luminaire
15P615L	15' cord - 3 conductor (black/white/green) - NEMA L6-15 plug (240V/15A locking)	Standard luminaire
15P715L	15' cord - 3 conductor (black/white/green) - NEMA L7-15 plug (277V/15A locking)	Standard luminaire
15P520L	15' cord - 3 conductor (black/white/green) - NEMA L5-20 plug (120V/20A locking)	Standard luminaire
15P620L	15' cord - 3 conductor (black/white/green) - NEMA L6-20 plug (240V/20A locking)	Standard luminaire
15P720L	15' cord - 3 conductor (black/white/green) - NEMA L7-20 plug (277V/20A locking)	Standard luminaire
15P2420L	15' cord - 3 conductor (black/white/green) - NEMA L24-20 plug (347V/20A locking)	UNC luminaire
15P820L	15' cord - 3 conductor (black/white/green) - NEMA L8-20 plug (480V/20A locking)	UNC luminaire

VTSR-8FT

americanlite®

Foot Vapor Tight Sensor Ready
Lumen & Kelvin Selectable

STANDARDS

HOUSING

- Light gray polycarbonate housing with stainless steel latches.

ELECTRICAL

- Operating temperature (ambient): -40°C to 50°C (-40°F to 122°F).
- Universal 120-277V AC voltage (50-60Hz) is standard.
- 0-10VDC dimming drivers are standard.
- Input transient surge protection = 2kV.
- Power factor > 0.90.
- Total Harmonic distortion < 20%.

OPTICAL SYSTEM

- Polycarbonate lens.
- Field selectable 3500K (warm white), 4000K (neutral white) and 5000K (cool white) color temperatures*.
- Tri-lumen selectable delivers 9,386 to 12,716 nominal lumens*.
- Long-life LEDs provide 174,000 hours of operation with at least 70% of initial lumen output (L70), and 53,000 hours with at least 90% of initial lumen output (L90)**.
- Sensor-ready receptacle standard.
- Screw in sensor ready. Remote control required for programming (Sensor and remote control sold separately).
- LED color maintenance < -0.0005 chromaticity shift (Δu'v') over the initial 6,000 hours of operation.
- Color rendering index > 80.

* Default kelvin temperature 4000k and highest lumen output.
**L70 & L90 hours are IES TM-21-11 calculated hours.

MOUNTING

- Surface mount kit is standard and v-hooks included. (Chain supplied by others.)
- Optional cable mount kit provides luminaire suspension.
- Easy installation in new construction or retrofit applications.

CODE COMPLIANCE

- cULus listed for wet locations.
- DLC standard listed.
- Complies with FCC part 15, class A.
- IP66 rated for ingress protection.
- IK10 rated for impact protection.

WARRANTY

- 5 year warranty on all electronics and housing.

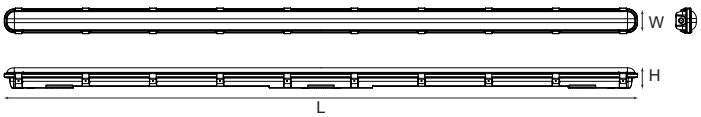

Model #	L (in)	W (in)	H (in)	Weight (lbs)
VTSR-8FT-12109L-3CCT	94.49	3.74	3.11	10.5

ORDERING INFORMATION

Example:VTSR-8FT-12109L-3CCT

Series	Nominal Lumen Output (Selectable)		Kelvin Selectable
VTSR-8FT	12109L	12,000 / 10,000 / 9,000 lm	3CCT 3500K / 4000K / 5000K

ACCESSORIES (ORDER SEPARATELY)

Sensor

HD09VR-PH5-1-90* = Passive infrared sensor with 90° elbow adapter- maximum mounting height = 39FT.
HD09VR-MH5-1-90* = Microwave step-dimming sensor with 90° elbow adapter - maximum mounting height = 49FT.
HD05R = Remote control for HD09VR sensors.

***HD09VR series has 5-dial setting apability.**

Factory settings or Sensor : detection a ea =100%, hold time = 5 sec, tand-by period = 0 sec, stand-by dimming level = 10%, daylight threshold = disabled

Photocell

HD07VR-A-1-90 = 12VDC photocell with 90° elbow adapter; RCA jack, factory set to turn on at 10 lux, turns off at 100 lux

Mounting O tio

CMK3 = 3 Meter cable mount kit
CMK5 = 5 Meter cable mount kit

COMPATIBLE DIMMERS AND CONTROLS

Manufacturer	Model Number	Dimmer Range	Load Switching Capacity
Americanlite	DWS-010V-T	10%-100%	600W
Americanlite	DWS-010V-D	10%-100%	600W
Leviton	IP710-LFZ	10%-100%	1200W
Lutron	DVSTV	10%-100%	450W

LUMEN TABLES

Series	Measurements	Low Lumens			Mid Lumens			High Lumens		
		3500K	4000K	5000K	3500K	4000K	5000K	3500K	4000K	5000K
VTSR-8FT-12109L-3CCT	Lumens	9,386	9,596	9,280	10,574	10,837	10,469	12,340	12,716	12,223
	Watt	68.68	66.38	69.03	78.64	75.8	79.13	92.4	90.4	94.94
	Efficacy	136.67	144.56	134.43	134.46	142.97	132.30	133.55	140.66	128.74

ELECTRICAL DATA

Series	CCT	Input Amps (A)								
		Low Lumens			Mid Lumens			High Lumens		
		120V	240V	277V	120V	240V	277V	120V	240V	277V
VTSR-8FT-12109L-3CCT	3500K	0.57	0.29	0.25	0.66	0.33	0.27	0.77	0.39	0.33
	4000K	0.55	0.28	0.24	0.63	0.32	0.27	0.75	0.38	0.33
	5000K	0.58	0.29	0.25	0.66	0.33	0.29	0.79	0.40	0.34

VTSR-765L-3CCT

americanlite®

Vapor Tight Sensor Ready Lumen & Kelvin Selectable Surface Mounted

STANDARDS

HOUSING

- Light gray polycarbonate housing with stainless steel latches.

ELECTRICAL

- Operating temperature (ambient): -40°C to 43°C (-40°F to 109°F).
- Universal 120-277V AC voltage (50-60Hz) is standard.
- 0-10VDC dimming drivers are standard.
- Emergency driver option available.
- Input transient surge protection = 2.5kV.
- Power factor > 0.90.
- Total Harmonic distortion < 20%.

OPTICAL SYSTEM

- Polycarbonate lens.
- Field selectable 3500K (warm white), 4000K (neutral white) and 5000K (cool white) color temperatures*.
- Tri-lumen selectable delivers 5,000 to 7,000 nominal lumens*.
- Long-life LEDs provide 178,000 hours of operation with at least 70% of initial lumen output (L70), and 54,000 hours with at least 90% of initial lumen output (L90)**.
- Sensor-ready receptacle standard.
- Screw in sensor ready. Remote control required for programming (Sensor and remote control sold separately).
- LED color maintenance <-0.0016 chromaticity shift (Δu'v') over the initial 6,000 hours of operation.
- Color rendering index > 80.

* Default kelvin temperature 4000k and highest lumen output.
**L70 & L90 hours are IES TM-21-11 calculated hours.

MOUNTING

- Surface mount kit is standard and v-hooks included. (Chain supplied by others.)
- Optional cable mount kit provides luminaire suspension.
- Easy installation in new construction or retrofit applications.

CODE COMPLIANCE

- cULus listed for wet locations.
- DLC standard listed.
- Complies with FCC part 15, class A.
- IP65 rated for ingress protection .
- IK10 rated for impact protection.
- Complies with NEMA 4X.
- Optional Certification for NSF/ANSI 2 Food Equipment for Food and Non Splash Zones

WARRANTY

- 5 year warranty on all electronics and housing.

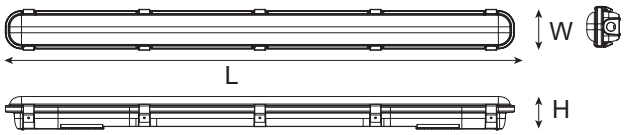

Model #	L (in)	W (in)	H (in)	Weight (lbs)
VTSR-765L-3CCT	47.24	3.77	3.10	4.64

ORDERING INFORMATION

Example:VTSR-765L-3CCT

Series	Nominal Lumen Output (Selectable)		Kelvin Selectable	Emergency Driver	Certification Options
VTSR	765L	7,000 / 6,000 / 5,000 lm	3CCT 3500K / 4000K / 5000K	EM10 10W Emergency Driver EM13 13W Emergency Driver Blank No Emergency Driver	NSF= NSF Certifie Blank= None

ACCESSORIES (ORDER SEPARATELY)

Sensor

HD07VR-PH-1-90 = Passive infrared sensor with 90° elbow adapter- maximum mounting height = 39FT.
HD07VR-MH-B-1-90 = Microwave step-dimming sensor with 90° elbow adapter - maximum mounting height = 49FT.
HD09VR-PH5-1-90* = Passive infrared sensor with 90° elbow adapter- maximum mounting height = 39FT.
HD09VR-MH5-1-90* = Microwave step-dimming sensor with 90° elbow adapter - maximum mounting height = 49FT.
HD05R = Remote control for HD07VR-PH-1-90, HD07VR-MH-B-1-90, HD09VR-PH5-1-90 and HD09VR-MH5-1-90 (required for HD07VR models change factory settings)

***HD09VR series has 5-dial setting apability.**

Factory settings or Sensor : detection a ea =100%, hold time = 5 sec, tand-by period = 0 sec, stand-by dimming level = 10%, daylight threshold = disabled

Lens

ZZ-LENS-VTSR-765L = Replacement lens for VTSR-765L-3CCT

Mounting O tio

CMK3 = 3 Meter cable mount kit
CMK5 = 5 Meter cable mount kit

Remote Mount EM Drivers

BLEM-CP-10C = 10W Emergency driver
BLEM-CP-13C = 13W Emergency driver

COMPATIBLE EMERGENCY DRIVERS-INSTALLED

Emergency Driver Part Number	EM10		EM13	
Model	Watts	EM Lumens	Watts	EM Lumens
VTSR-765L-3CCT	10	1441	13	1768

COMPATIBLE DIMMERS AND CONTROLS

Manufacturer	Model Number	Dimmer Range	Load Switching Capacity
Americanlite	DWS-010V-T	10%-100%	600W
Americanlite	DWS-010V-D	10%-100%	600W
Leviton	IP710-LFZ	10%-100%	1200W
Lutron	DVSTV	10%-100%	450W

LUMEN TABLES

Series	Measurements	Low Lumens			Mid Lumens			High Lumens		
		3500K	4000K	5000K	3500K	4000K	5000K	3500K	4000K	5000K
VTSR-765L-3CCT	Lumens	5157	5303	5181	6009	6198	6034	7295	7611	7381
	Watt	37	36	37	44	43	44	53	51	53
	Efficacy	139.38	147.31	140.03	136.57	144.14	137.14	137.64	149.24	139.26

ELECTRICAL DATA

Series	CCT	Input Amps (A)								
		Low Lumens			Mid Lumens			High Lumens		
		120V	240V	277V	120V	240V	277V	120V	240V	277V
VTSR-765L-3CCT	3500K	0.31	0.15	0.13	0.37	0.18	0.16	0.44	0.22	0.19
	4000K	0.30	0.15	0.13	0.36	0.18	0.16	0.43	0.21	0.18
	5000K	0.31	0.15	0.13	0.37	0.18	0.16	0.44	0.22	0.19

PHOTOMETRICS

VTSR-765L-3CCT

Luminaire Data

Description	4' Vapor Tight Slim Lumen and Kelvin Select
Total Lumens	7,382
Input Wattage	53
Efficacy (lm/W)	140
Spacing Criterion (0-180°)	1.26
Spacing Criterion (90-270°)	1.24

Photometrics calculated at 4000k and highest lumen setting.

Zonal Lumen Summary

Zone	Lumens	%Fixt
0-20°	838	11.4%
0-30°	1,772	24.0%
0-40°	2,893	39.2%
20-50°	3,222	43.7%
40-70°	3,142	42.6%
0-60°	5,146	69.7%
0-80°	6,657	90.2%
0-90°	7,010	95.0%
90-180°	372	5.0%
0-180°	7,382	100.0%

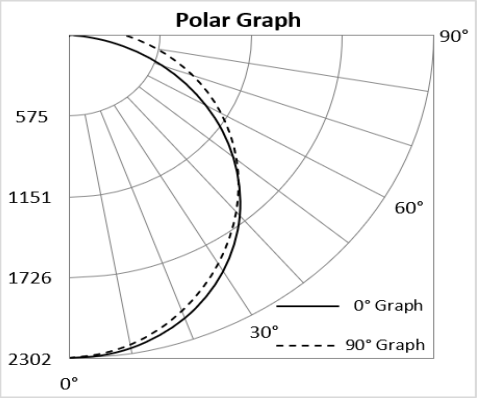

PLUGS AND CORDS

When ordering a plug, use the following suffix choices.
Example: VTSR-765L-3CCT-10C4
Note: Cord & plugs do not affect the ability to install sensors.

Part number suffix	Description	For use with
6C3	6' cord - 3 conductor (black/white/green)	Standard
6C4	6' cord - 4 conductor (black/white/green/red)	EM driver
6C5	6' cord - 5 conductor (black/white/green/purple/pink)	Dimming
6C6	6' cord - 6 conductor (black/white/green/red/purple/pink)	Dimming & EM driver
10C3	10' cord - 3 conductor (black/white/green)	Standard
10C4	10' cord - 4 conductor (black/white/green/red)	EM driver
10C5	10' cord - 5 conductor (black/white/green/purple/pink)	Dimming
10C6	10' cord - 6 conductor (black/white/green/red/purple/pink)	Dimming & EM driver
15C3	15' cord - 3 conductor (black/white/green)	Standard
15C4	15' cord - 4 conductor (black/white/green/red)	EM driver
15C5	15' cord - 5 conductor (black/white/green/purple/pink)	Dimming
15C6	15' cord - 6 conductor (black/white/green/red/purple/pink)	Dimming & EM driver
6P515	6' cord - 3 conductor (black/white/green) - NEMA 5-15 plug (120V/15A)	Standard luminaire
6P615	6' cord - 3 conductor (black/white/green) - NEMA 6-15 plug (240V/15A)	Standard luminaire
6P715	6' cord - 3 conductor (black/white/green) - NEMA 7-15 plug (277V/15A)	Standard luminaire
6P520	6' cord - 3 conductor (black/white/green) - NEMA 5-20 plug (120V/20A)	Standard luminaire
6P620	6' cord - 3 conductor (black/white/green) - NEMA 6-20 plug (277V/20A)	Standard luminaire
6P515L	6' cord - 3 conductor (black/white/green) - NEMA L5-15 plug (120V/15A locking)	Standard luminaire
6P615L	6' cord - 3 conductor (black/white/green) - NEMA L6-15 plug (240V/15A locking)	Standard luminaire
6P715L	6' cord - 3 conductor (black/white/green) - NEMA L7-15 plug (277V/15A locking)	Standard luminaire
6P520L	6' cord - 3 conductor (black/white/green) - NEMA L5-20 plug (120V/20A locking)	Standard luminaire
6P620L	6' cord - 3 conductor (black/white/green) - NEMA L6-20 plug (240V/20A locking)	Standard luminaire
6P720L	6' cord - 3 conductor (black/white/green) - NEMA L7-20 plug (277V/20A locking)	Standard luminaire
10P515	10' cord - 3 conductor (black/white/green) - NEMA 5-15 plug (120V/15A)	Standard luminaire
10P615	10' cord - 3 conductor (black/white/green) - NEMA 6-15 plug (240V/15A)	Standard luminaire
10P715	10' cord - 3 conductor (black/white/green) - NEMA 7-15 plug (277V/15A)	Standard luminaire
10P520	10' cord - 3 conductor (black/white/green) - NEMA 5-20 plug (120V/20A)	Standard luminaire
10P620	10' cord - 3 conductor (black/white/green) - NEMA 6-20 plug (277V/20A)	Standard luminaire
10P515L	10' cord - 3 conductor (black/white/green) - NEMA L5-15 plug (120V/15A locking)	Standard luminaire
10P615L	10' cord - 3 conductor (black/white/green) - NEMA L6-15 plug (240V/15A locking)	Standard luminaire
10P715L	10' cord - 3 conductor (black/white/green) - NEMA L7-15 plug (277V/15A locking)	Standard luminaire
10P520L	10' cord - 3 conductor (black/white/green) - NEMA L5-20 plug (120V/20A locking)	Standard luminaire
10P620L	10' cord - 3 conductor (black/white/green) - NEMA L6-20 plug (240V/20A locking)	Standard luminaire

Part number suffix	Description	For use with
10P720L	10' cord - 3 conductor (black/white/green) - NEMA L7-20 plug (277V/20A locking)	Standard luminaire
15P515	15' cord - 3 conductor (black/white/green) - NEMA 5-15 plug (120V/15A)	Standard luminaire
15P615	15' cord - 3 conductor (black/white/green) - NEMA 6-15 plug (240V/15A)	Standard luminaire
15P715	15' cord - 3 conductor (black/white/green) - NEMA 7-15 plug (277V/15A)	Standard luminaire
15P520	15' cord - 3 conductor (black/white/green) - NEMA 5-20 plug (120V/20A)	Standard luminaire
15P620	15' cord - 3 conductor (black/white/green) - NEMA 6-20 plug (277V/20A)	Standard luminaire
15P515L	15' cord - 3 conductor (black/white/green) - NEMA L5-15 plug (120V/15A locking)	Standard luminaire
15P615L	15' cord - 3 conductor (black/white/green) - NEMA L6-15 plug (240V/15A locking)	Standard luminaire
15P715L	15' cord - 3 conductor (black/white/green) - NEMA L7-15 plug (277V/15A locking)	Standard luminaire
15P520L	15' cord - 3 conductor (black/white/green) - NEMA L5-20 plug (120V/20A locking)	Standard luminaire
15P620L	15' cord - 3 conductor (black/white/green) - NEMA L6-20 plug (240V/20A locking)	Standard luminaire
15P720L	15' cord - 3 conductor (black/white/green) - NEMA L7-20 plug (277V/20A locking)	Standard luminaire

VTSR-211816L-3CCT

americanlite®

Vapor Tight Sensor Ready
Lumen & Kelvin Selectable

STANDARDS

HOUSING

- Light gray polycarbonate housing with stainless steel latches.

ELECTRICAL

- Operating temperature (ambient): -40°C to 43°C (-40°F to 109°F).
- Universal 120-277V AC voltage (50-60Hz) is standard.
- 0-10VDC dimming drivers are standard.
- Emergency driver option available.
- Input transient surge protection = 2.5kV.
- Power factor > 0.90.
- Total Harmonic distortion < 20%.

OPTICAL SYSTEM

- Polycarbonate lens.
- Field selectable 3500K (warm white), 4000K (neutral white) and 5000K (cool white) color temperatures*.
- Tri-lumen selectable delivers 16,000 to 21,000 nominal lumens*.
- Long-life LEDs provide 178,000 hours of operation with at least 70% of initial lumen output (L70), and 54,000 hours with at least 90% of initial lumen output (L90)**.
- Sensor-ready receptacle standard.
- Screw in sensor ready. Remote control required for programming (Sensor and remote control sold separately).
- LED color maintenance <-0.0016 chromaticity shift (Δu'v') over the initial 6,000 hours of operation.
- Color rendering index > 80.

* Default kelvin temperature 4000k and highest lumen output.
**L70 & L90 hours are IES TM-21-11 calculated hours.

MOUNTING

- Surface mount kit is standard and v-hooks included. (Chain supplied by others.)
- Optional cable mount kit provides luminaire suspension.
- Easy installation in new construction or retrofit applications.

CODE COMPLIANCE

- cULus listed for wet locations.
- DLC premium listed.
- Complies with FCC part 15, class A.
- IP66 rated for ingress protection.
- IK10 rated for impact protection.
- Complies with NEMA 4X.
- Optional Certification for NSF/ANSI 2 Food Equipment for Food and Non Splash Zones

WARRANTY

- 5 year warranty on all electronics and housing.

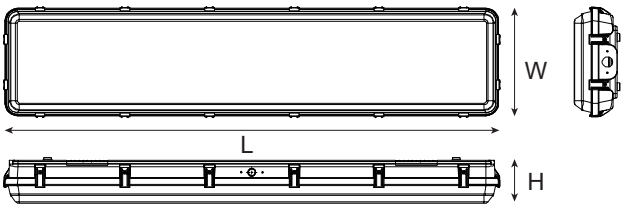

Model #	L (in)	W (in)	H (in)	Weight (lbs)
VTSR-211816L-3CCT	47.50	10.48	4.53	14.81

ORDERING INFORMATION

Example:VTSR-211816L-3CCT

Series	Nominal Lumen Output (Selectable)		Kelvin Selectable	Emergency Driver	Certification Options
VTSR	211816L	21,000 / 18,000 / 16,000 lm	3CCT 3500K / 4000K / 5000K	EM10 10W Emergency Driver EM13 13W Emergency Driver Blank No Emergency Driver	NSF= NSF Certifie Blank= None

ACCESSORIES (ORDER SEPARATELY)

Sensor

HD07VR-PH-1-90 = Passive infrared sensor with 90° elbow adapter- maximum mounting height = 39FT.
HD07VR-MH-B-1-90 = Microwave step-dimming sensor with 90° elbow adapter - maximum mounting height = 49FT.
HD09VR-PH5-1-90* = Passive infrared sensor with 90° elbow adapter- maximum mounting height = 39FT.
HD09VR-MH5-1-90* = Microwave step-dimming sensor with 90° elbow adapter - maximum mounting height = 49FT.
HD05R = Remote control for HD07VR-PH-1-90, HD07VR-MH-B-1-90, HD09VR-PH5-1-90 and HD09VR-MH5-1-90 (required for HD07VR models change factory settings)

***HD09VR series has 5-dial setting capability**.

Factory settings for Sensor : detection area =100%, hold time = 5 sec, stand-by period = 0 sec, stand-by dimming level = 10%, daylight threshold = disabled

Lens

ZZ-LENS-VTSR-211816L = Replacement lens for VTSR-211816L-3CCT

Mounting Option

CMK3 = 3 Meter cable mount kit
CMK5 = 5 Meter cable mount kit

Remote Mount EM Drivers

BLEM-CP-10C = 10W Emergency driver
BLEM-CP-13C = 13W Emergency driver

COMPATIBLE EMERGENCY DRIVERS-INSTALLED

Emergency Driver Part Number	EM10		EM13	
Model	Watts	EM Lumens	Watts	EM Lumens
VTSR-211816L-3CCT	10	1600	13	2080

COMPATIBLE DIMMERS AND CONTROLS

Manufacturer	Model Number	Dimmer Range	Load Switching Capacity
Americanlite	DWS-010V-T	10%-100%	600W
Americanlite	DWS-010V-D	10%-100%	600W
Leviton	IP710-LFZ	10%-100%	1200W
Lutron	DVSTV	10%-100%	450W

LUMEN TABLES

Series	Measurements	Low Lumens			Mid Lumens			High Lumens		
		3500K	4000K	5000K	3500K	4000K	5000K	3500K	4000K	5000K
VTSR-211816L-3CCT	Lumens	15,773	16,261	16,264	17,538	18,257	18,276	20,359	21,066	21,001
	Watt	98.58	95.48	97.59	112.21	109.07	112.12	130.57	125.32	129.16
	Efficacy	160.00	170.31	166.66	156.30	167.39	163.00	155.92	168.10	162.60

ELECTRICAL DATA

Series	CCT	Input Amps (A)								
		Low Lumens			Mid Lumens			High Lumens		
		120V	240V	277V	120V	240V	277V	120V	240V	277V
VTSR-211816L-3CCT	3500K	0.82	0.41	0.36	0.94	0.47	0.41	1.09	0.54	0.47
	4000K	0.80	0.40	0.34	0.91	0.45	0.39	1.04	0.52	0.45
	5000K	0.81	0.41	0.35	0.93	0.47	0.40	1.08	0.54	0.47

PHOTOMETRICS

VTSR-211816L-3CCT

Luminaire Data

Description	4' H.O. Vapor Tight Lumen and Kelvin Select
Total Lumens	21,001
Input Wattage	129
Efficacy (lm/W)	163
Spacing Criterion (0-180°)	1.28
Spacing Criterion (90-270°)	1.3

Photometrics calculated at 4000k and highest lumen setting.

Zonal Lumen Summary

Zone	Lumens	%Fixt
0-20°	2,424	11.5%
0-30°	5,191	24.7%
0-40°	8,586	40.9%
20-50°	9,727	46.3%
40-70°	9,422	44.9%
0-60°	15,422	73.4%
0-80°	19,685	93.7%
0-90°	20,372	97.0%
90-180°	628	3.0%
0-180°	21,001	100.0%

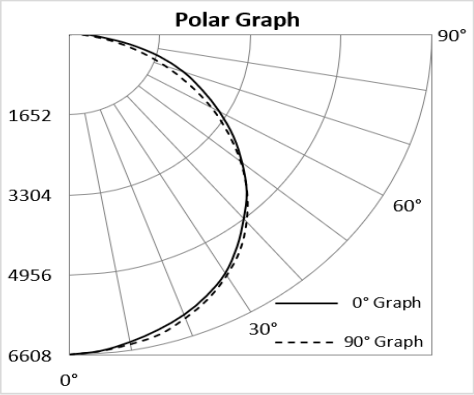

PLUGS AND CORDS

When ordering a plug, use the following suffix choices.
Example: VTSR-211816L-3CCT-10C4
Note: Cord & plugs do not affect the ability to install sensors.

Part number suffix	Description	For use with
6C3	6' cord - 3 conductor (black/white/green)	Standard
6C4	6' cord - 4 conductor (black/white/green/red)	EM driver
6C5	6' cord - 5 conductor (black/white/green/purple/pink)	Dimming
6C6	6' cord - 6 conductor (black/white/green/red/purple/pink)	Dimming & EM driver
10C3	10' cord - 3 conductor (black/white/green)	Standard
10C4	10' cord - 4 conductor (black/white/green/red)	EM driver
10C5	10' cord - 5 conductor (black/white/green/purple/pink)	Dimming
10C6	10' cord - 6 conductor (black/white/green/red/purple/pink)	Dimming & EM driver
15C3	15' cord - 3 conductor (black/white/green)	Standard
15C4	15' cord - 4 conductor (black/white/green/red)	EM driver
15C5	15' cord - 5 conductor (black/white/green/purple/pink)	Dimming
15C6	15' cord - 6 conductor (black/white/green/red/purple/pink)	Dimming & EM driver
6P515	6' cord - 3 conductor (black/white/green) - NEMA 5-15 plug (120V/15A)	Standard luminaire
6P615	6' cord - 3 conductor (black/white/green) - NEMA 6-15 plug (240V/15A)	Standard luminaire
6P715	6' cord - 3 conductor (black/white/green) - NEMA 7-15 plug (277V/15A)	Standard luminaire
6P520	6' cord - 3 conductor (black/white/green) - NEMA 5-20 plug (120V/20A)	Standard luminaire
6P620	6' cord - 3 conductor (black/white/green) - NEMA 6-20 plug (277V/20A)	Standard luminaire
6P515L	6' cord - 3 conductor (black/white/green) - NEMA L5-15 plug (120V/15A locking)	Standard luminaire
6P615L	6' cord - 3 conductor (black/white/green) - NEMA L6-15 plug (240V/15A locking)	Standard luminaire
6P715L	6' cord - 3 conductor (black/white/green) - NEMA L7-15 plug (277V/15A locking)	Standard luminaire
6P520L	6' cord - 3 conductor (black/white/green) - NEMA L5-20 plug (120V/20A locking)	Standard luminaire
6P620L	6' cord - 3 conductor (black/white/green) - NEMA L6-20 plug (240V/20A locking)	Standard luminaire
6P720L	6' cord - 3 conductor (black/white/green) - NEMA L7-20 plug (277V/20A locking)	Standard luminaire
10P515	10' cord - 3 conductor (black/white/green) - NEMA 5-15 plug (120V/15A)	Standard luminaire
10P615	10' cord - 3 conductor (black/white/green) - NEMA 6-15 plug (240V/15A)	Standard luminaire
10P715	10' cord - 3 conductor (black/white/green) - NEMA 7-15 plug (277V/15A)	Standard luminaire
10P520	10' cord - 3 conductor (black/white/green) - NEMA 5-20 plug (120V/20A)	Standard luminaire
10P620	10' cord - 3 conductor (black/white/green) - NEMA 6-20 plug (277V/20A)	Standard luminaire
10P515L	10' cord - 3 conductor (black/white/green) - NEMA L5-15 plug (120V/15A locking)	Standard luminaire
10P615L	10' cord - 3 conductor (black/white/green) - NEMA L6-15 plug (240V/15A locking)	Standard luminaire
10P715L	10' cord - 3 conductor (black/white/green) - NEMA L7-15 plug (277V/15A locking)	Standard luminaire
10P520L	10' cord - 3 conductor (black/white/green) - NEMA L5-20 plug (120V/20A locking)	Standard luminaire
10P620L	10' cord - 3 conductor (black/white/green) - NEMA L6-20 plug (240V/20A locking)	Standard luminaire

Part number suffix	Description	For use with
10P720L	10' cord - 3 conductor (black/white/green) - NEMA L7-20 plug (277V/20A locking)	Standard luminaire
15P515	15' cord - 3 conductor (black/white/green) - NEMA 5-15 plug (120V/15A)	Standard luminaire
15P615	15' cord - 3 conductor (black/white/green) - NEMA 6-15 plug (240V/15A)	Standard luminaire
15P715	15' cord - 3 conductor (black/white/green) - NEMA 7-15 plug (277V/15A)	Standard luminaire
15P520	15' cord - 3 conductor (black/white/green) - NEMA 5-20 plug (120V/20A)	Standard luminaire
15P620	15' cord - 3 conductor (black/white/green) - NEMA 6-20 plug (277V/20A)	Standard luminaire
15P515L	15' cord - 3 conductor (black/white/green) - NEMA L5-15 plug (120V/15A locking)	Standard luminaire
15P615L	15' cord - 3 conductor (black/white/green) - NEMA L6-15 plug (240V/15A locking)	Standard luminaire
15P715L	15' cord - 3 conductor (black/white/green) - NEMA L7-15 plug (277V/15A locking)	Standard luminaire
15P520L	15' cord - 3 conductor (black/white/green) - NEMA L5-20 plug (120V/20A locking)	Standard luminaire
15P620L	15' cord - 3 conductor (black/white/green) - NEMA L6-20 plug (240V/20A locking)	Standard luminaire
15P720L	15' cord - 3 conductor (black/white/green) - NEMA L7-20 plug (277V/20A locking)	Standard luminaire

Stairwell Luminaire Lumen & Kelvin Selectable

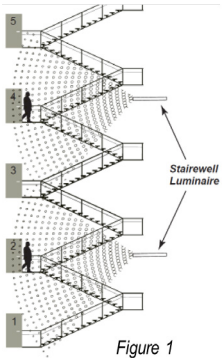

Figure 1

STANDARDS

c UL us LISTED | DLC LISTED PREMIUM | FC | DAMP | 1kV Surge Protection

HOUSING

- Premium powder-coat, steel, white housing.

ELECTRICAL

- Operating temperature (ambient): -25°C to 50°C (-13°F to 122°F).
- Universal 120-277V AC voltage (50-60Hz) is standard.
- 0-10VDC dimming drivers are standard.
- Emergency driver option available.
- Input transient surge protection = 1kV.
- Power factor > 0.90.
- Total Harmonic distortion < 20%.

OPTICAL SYSTEM

- PMMA (polymethyl methacrylate) frosted lens.
- Field selectable 3500k(warm white), 4000k (neutral white) and 5000k (cool white) color temperatures.*
- Tri-lumen selectable delivers 2,100 to 3,300 nominal lumens (see lumen tables on page 2).**
- Long-life LEDs provide 190,000 hours of operation with at least 70% of initial lumen output (L70), and 58,000 hours with at least 90% of initial lumen output (L90).***
- Optional occupancy dimming Sensor (factory installed) .
- Remote control required for programming (see default settings on Page 2).
- LED color maintenance < 0.002 chromaticity shift (Δu'v') over the initial 6,000 hours of operation.
- Color rendering index > 80%.

* Default kelvin temperature = 4000k.
** Default power setting = highest lumen output.
* **L70 & L90 hours are IES TM-21-11 calculated hours.

MOUNTING

- Surface mount.

CODE COMPLIANCE

- cULus listed for damp locations.
- DLC premium listed.
- Complies with FCC part 15, class A.
- Complies with UL924 when Emergency driver is installed.

WARRANTY

- 5 year warranty on all electronics and housing.

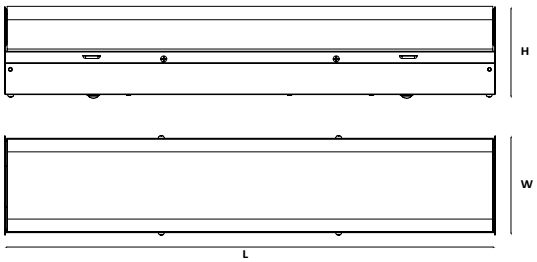

Model #	L (in)	W (in)	H (in)	Weight (lbs)
SW-2FT-332721L-3CCT	22.25	4.25	4.00	3.70
SW-2FT-332721L-3CCT-ODS	22.25	4.25	4.00	3.75

ORDERING INFORMATION

Example: SW-2FT-332721L-3CCT

Series	Nominal Lumen Output (Selectable)		Kelvin Selectable	Emergency Driver	Sensor
SW-2FT	332721L	3,300 / 2,700 / 2,100	3CCT 35K / 4K / 5K	EM5 5W Emergency Driver EM10 10W Emergency Driver Blank No Emergency Driver	ODS Microwave Sensor Blank No Sensor

ACCESSORIES (ORDER SEPARATELY)

Sensor:

US002 = Default sensor settings: detection area =100%, hold time = 5 sec, daylight threshold = disabled, stand-by period = 0 sec, stand-by dimming level = 10%

HD03R = Remote control required for programming (sold separately)

Remote Mount EM Drivers:

BLEM-SLP-CP-5C = 5W Emergency Driver W/Conduit

BLEM-SLP-CP-10C = 10W Emergency Driver W/Conduit

LUMEN TABLES

Series	Measure-ments	Low Lumens			Mid Lumens			High Lumens		
		3500k	4000k	5000k	3500k	4000k	5000k	3500k	4000k	5000k
SW-2FT-332721L-3CCT	Lumens	2,048	2,132	2,124	2,728	2,880	2,789	3,249	3,462	3,324
	Watt	15.29	14.86	15.49	20.80	20.12	20.76	25.41	24.48	25.39
	Efficacy	134	143	137	131	143	134	128	141	131

ELECTRICAL DATA

Series	CCT	Input Amps (A)								
		Low Lumens			Mid Lumens			High Lumens		
		120V	240V	277V	120V	240V	277V	120V	240V	277V
SW-2FT-332721L-3CCT	3500k	0.13	0.06	0.06	0.17	0.09	0.08	0.21	0.11	0.09
	4000k	0.12	0.06	0.05	0.17	0.08	0.07	0.20	0.10	0.09
	5000k	0.13	0.06	0.06	0.17	0.09	0.07	0.21	0.11	0.09

PHOTOMETRICS

SW-2FT-332721L-3CCT

Luminaire Data

Description	2FT Stairwell Luminare Lumen and Kelvin Select
Total Lumens	3,324
Input Wattage	25
Efficacy (lm/W)	131
Spacing Criterion (0-180°)	1.3
Spacing Criterion (90-270°)	1.2

Photometrics calculated at 5000k - high lumens setting

Zonal Lumen Summary

Zone	Lumens	%Fixt
0-20°	363	10.9%
0-30°	767	23.1%
0-40°	1,251	37.6%
20-50°	1,390	41.8%
40-70°	1,346	40.5%
0-60°	2,216	66.7%
0-80°	2,877	86.5%
0-90°	3,058	92.0%
90-180°	266	8.0%
0-180°	3,324	100.0%

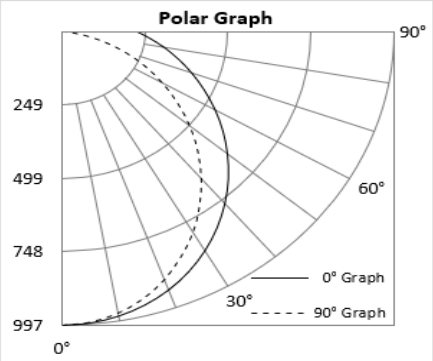

COMPATIBLE EMERGENCY DRIVERS-INSTALLED

Emergency Driver Part Number	EM5		EM10	
Model	Watts	EM Lumens	Watts	EM Lumens
SW-2FT-332721L-3CCT	5	640	10	1280
SW-2FT-332721L-3CCT-ODS	5	640	10	1280

COMPATIBLE DIMMERS AND CONTROLS

Manufacturer	Model Number	Dimmer Range	Load Switching Capacity
Americanlite	DWS-010V-T	10%-100%	600W
Anericanlite	DWS-010V-D	10%-100%	600W
Leviton	IP710-LFZ	10%-100%	1200W
Lutron	DVSTV	10%-100%	450W

PLUGS AND CORDS

Part number suffix	Description	For use with
6C3	6' cord - 3 conductor (black/white/green)	Standard
6C4	6' cord - 4 conductor (black/white/green/red)	EM driver
6C5	6' cord - 5 conductor (black/white/green/purple/pink)	Dimming
6C6	6' cord - 6 conductor (black/white/green/red/purple/pink)	Dimming & EM driver
10C3	10' cord - 3 conductor (black/white/green)	Standard
10C4	10' cord - 4 conductor (black/white/green/red)	EM driver
10C5	10' cord - 5 conductor (black/white/green/purple/pink)	Dimming
10C6	10' cord - 6 conductor (black/white/green/red/purple/pink)	Dimming & EM driver
15C3	15' cord - 3 conductor (black/white/green)	Standard
15C4	15' cord - 4 conductor (black/white/green/red)	EM driver
15C5	15' cord - 5 conductor (black/white/green/purple/pink)	Dimming
15C6	15' cord - 6 conductor (black/white/green/red/purple/pink)	Dimming & EM driver
6W3	6' whip - 3 conductor (black/white/green)	Standard
6W4	6' whip - 4 conductor (black/white/green/red)	EM driver
6W5	6' whip - 5 conductor (black/white/green/purple/pink)	Dimming
6W6	6' whip - 6 conductor (black/white/green/red/purple/pink)	Dimming & EM driver
6P515	6' cord - 3 conductor (black/white/green) - NEMA 5-15 plug (120V/15A)	Standard luminaire
6P615	6' cord - 3 conductor (black/white/green) - NEMA 6-15 plug (240V/15A)	Standard luminaire

PLUGS AND CORDS

Part number suffix	Description	For use with
6P715	6' cord - 3 conductor (black/white/green) - NEMA 7-15 plug (277V/15A)	Standard luminaire
6P520	6' cord - 3 conductor (black/white/green) - NEMA 5-20 plug (120V/20A)	Standard luminaire
6P620	6' cord - 3 conductor (black/white/green) - NEMA 6-20 plug (277V/20A)	Standard luminaire
6P515L	6' cord - 3 conductor (black/white/green) - NEMA L5-15 plug (120V/15A locking)	Standard luminaire
6P615L	6' cord - 3 conductor (black/white/green) - NEMA L6-15 plug (240V/15A locking)	Standard luminaire
6P715L	6' cord - 3 conductor (black/white/green) - NEMA L7-15 plug (277V/15A locking)	Standard luminaire
6P520L	6' cord - 3 conductor (black/white/green) - NEMA L5-20 plug (120V/20A locking)	Standard luminaire
6P620L	6' cord - 3 conductor (black/white/green) - NEMA L6-20 plug (240V/20A locking)	Standard luminaire
6P720L	6' cord - 3 conductor (black/white/green) - NEMA L7-20 plug (277V/20A locking)	Standard luminaire
10P515	10' cord - 3 conductor (black/white/green) - NEMA 5-15 plug (120V/15A)	Standard luminaire
10P615	10' cord - 3 conductor (black/white/green) - NEMA 6-15 plug (240V/15A)	Standard luminaire
10P715	10' cord - 3 conductor (black/white/green) - NEMA 7-15 plug (277V/15A)	Standard luminaire
10P520	10' cord - 3 conductor (black/white/green) - NEMA 5-20 plug (120V/20A)	Standard luminaire
10P620	10' cord - 3 conductor (black/white/green) - NEMA 6-20 plug (277V/20A)	Standard luminaire
10P515L	10' cord - 3 conductor (black/white/green) - NEMA L5-15 plug (120V/15A locking)	Standard luminaire
10P615L	10' cord - 3 conductor (black/white/green) - NEMA L6-15 plug (240V/15A locking)	Standard luminaire
10P715L	10' cord - 3 conductor (black/white/green) - NEMA L7-15 plug (277V/15A locking)	Standard luminaire
10P520L	10' cord - 3 conductor (black/white/green) - NEMA L5-20 plug (120V/20A locking)	Standard luminaire
10P620L	10' cord - 3 conductor (black/white/green) - NEMA L6-20 plug (240V/20A locking)	Standard luminaire
10P720L	10' cord - 3 conductor (black/white/green) - NEMA L7-20 plug (277V/20A locking)	Standard luminaire
15P515	15' cord - 3 conductor (black/white/green) - NEMA 5-15 plug (120V/15A)	Standard luminaire
15P615	15' cord - 3 conductor (black/white/green) - NEMA 6-15 plug (240V/15A)	Standard luminaire
15P715	15' cord - 3 conductor (black/white/green) - NEMA 7-15 plug (277V/15A)	Standard luminaire
15P520	15' cord - 3 conductor (black/white/green) - NEMA 5-20 plug (120V/20A)	Standard luminaire
15P620	15' cord - 3 conductor (black/white/green) - NEMA 6-20 plug (277V/20A)	Standard luminaire
15P515L	15' cord - 3 conductor (black/white/green) - NEMA L5-15 plug (120V/15A locking)	Standard luminaire
15P615L	15' cord - 3 conductor (black/white/green) - NEMA L6-15 plug (240V/15A locking)	Standard luminaire
15P715L	15' cord - 3 conductor (black/white/green) - NEMA L7-15 plug (277V/15A locking)	Standard luminaire
15P520L	15' cord - 3 conductor (black/white/green) - NEMA L5-20 plug (120V/20A locking)	Standard luminaire
15P620L	15' cord - 3 conductor (black/white/green) - NEMA L6-20 plug (240V/20A locking)	Standard luminaire
15P720L	15' cord - 3 conductor (black/white/green) - NEMA L7-20 plug (277V/20A locking)	Standard luminaire

SW-LKFS

americanlite®

Lumen and Kelvin Field Selectable Stairwell Luminaire

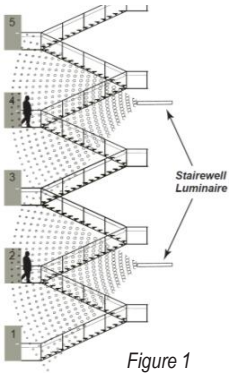

Figure 1

STANDARD

CERTIFIED | DLC LISTED PREMIUM | FC | DAMP | 2.0kV Surge Protection

FEATURES

- *Field selectable 3500k (warm/neutral white), 4000k (neutral white), and 5000k (cool white) color temperatures.**
- *Long-life LEDs provide 190,000 hours of operation with at least 70% of initial lumen output (L_{70}), and 58,000 hours with at least 90% of initial lumen output (L_{90}).***
- *Selectable lumen outputs range from 4200 nominal lumens to 6000 nominal lumens.*
- *Universal 120-277 AC voltage (50-60Hz) is standard.*
- *0-10vdc dimming drivers are standard.*
- *Power factor > 0.90.*
- *Total harmonic distortion < 20%.*
- *Color rendering index > 80.*
- *Painted steel housing and PMMA (polymethyl methacrylate) frosted lenses are standard.*
- *Optional occupancy dimming sensor specifically designed to sense motion and illuminate both up and down stairwells (see figure 1).*
- *Easy installation in new construction or retrofit.*

** Contact factory for other color temperatures and lumen packages.*
***L_{70} hours are IES TM-21-11 calculated hours.*

WARRANTY & LISTINGS

- *cULus listed for damp locations ambient temperatures from -20°C to 50°C (-4°F to 122°F).*
- *cULus 1598 and 924 listed.**
- *DLC 5.1 premium approved.*
- *Complies with FCC Part 15, class A.*
- *Complies with IEEE C.62.41-1991, input transient protection (2.0kV).*
- *5-year warranty of all electronics and housing.*

** UL 924 listed when used with emergency drivers.*

MOUNTING OPTIONS

- Surface Mounting

DIMENSIONS

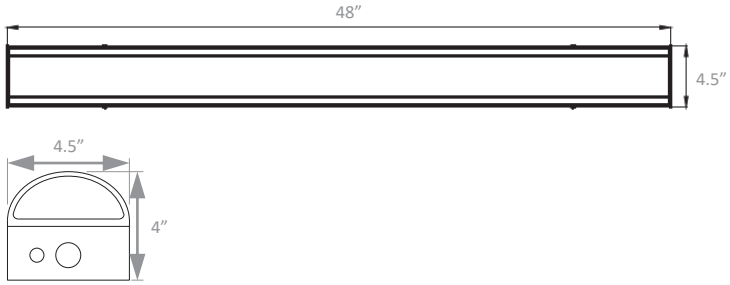

Model	Length (L)	Width (W)	Height (H)	Weight
SW-LKFS	48”	4.5”	4”	8 lbs.

ORDERING INFORMATION

Example: SW-LKFS-ODS-EM8

Series	Lumen Output/ Color Temperature			Occupancy Sensor + Dimming [1 2]		Optional Emergency Driver		Accessories (Order Separately)	
SW	LKFS*	Selectable Lumens	Selectable CCT	Blank	No Sensor	EM5	600 lumens	HD03R	Sensor remote control
		4,200 lm	3500k	ODS	Occupancy Dimming Sensor	EM10	1200 lumens		
		4,800 lm	4000k			EM13	1560 lumens		
	*Field selectable	6,000 lm	5000k			Blank	No emergency driver		

[1] Remote control Required for programming (sold separately).
[2] Default sensor settings: detection area = 100%, hold time = 5 seconds, daylight threshold = disabled, stand-by period = 0 seconds, stand-by dimming level = 10%

ELECTRICAL

Series	Measurements	Low Lumens			Mid Lumens			High Lumens		
		3500K	4000K	5000K	3500K	4000K	5000K	3500K	4000K	5000K
SW-LKFS	Lumens	4245	4311	4208	4820	4941	4792	6226	6499	6056
	Watts	29	28	29	34	33	34	46	45	46
	Efficacy	145	152	143	143	150	141	135	146	130
	Input Current (A)	120V = 0.24A	120V = 0.23A	120V = 0.24A	120V = 0.28A	120V = 0.28A	120V = 0.28A	120V = 0.38A	120V = 0.38A	120V = 0.38A
		240V = 0.12A	240V = 0.12A	240V = 0.12A	240V = 0.14A	240V = 0.14A	240V = 0.14A	240V = 0.19A	240V = 0.19A	240V = 0.19A
		277V = 0.10A	277V = 0.10A	277V = 0.10A	277V = 0.12A	277V = 0.12A	277V = 0.12A	277V = 0.17A	277V = 0.16A	277V = 0.17A

PHOTOMETRIC DATA

SW-LKFS

Luminaire Data

Description	Stairwell Luminare LKFS - 5K
Total Lumens	6,056
Input Wattage	46
Efficacy (lm/W)	131
Spacing Criterion (0-180°)	1.26
Spacing Criterion (90-270°)	1.32

Zonal Lumen Summary

Zone	Lumens	%Fixt
0-20°	617	10.2%
0-30°	1,315	21.7%
0-40°	2,169	35.8%
20-50°	2,462	40.7%
40-70°	2,492	41.1%
0-60°	3,937	65.0%
0-80°	5,198	85.8%
0-90°	5,547	91.6%
90-180°	509	8.4%
0-180°	6,056	100.0%

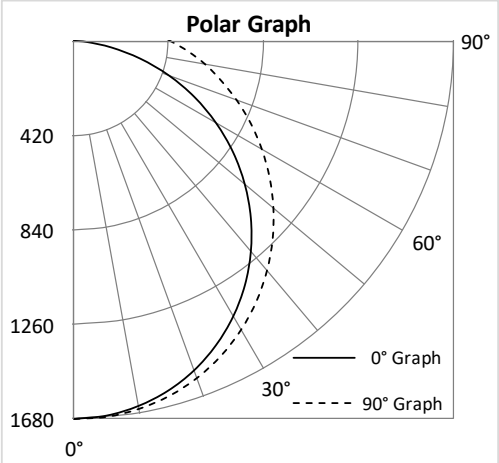

Lumen and Kelvin Field Selectable Strip Light

STANDARD

CERTIFIED | DLC LISTED | FCC | DAMP | 1.0kV Surge Protection

FEATURES

- *Field selectable 3500k (warm/neutral white), 4000k (neutral white), and 5000k (cool white) color temperatures.**
- *Long-life LEDs provide 196,000 hours of operation with at least 70% of initial lumen output (L_{70}), and 60,000 hours with at least 90% of initial lumen output (L_{90}).***
- *LED chromaticity based on ≤ 4-step ANSI quadrangles.*
- *LED color maintenance ≤ 0.002 chromaticity shift (Δu'v') over the initial 6,000 hours of operation.*
- *SL-4FT-5L-LKFS provides a range of 3,700 to 5,200 nominal lumens and 138 to 152 lumens per watt (LPW).**
- *SL-8FT-10L-LKFS provides a range of 7,100 to 10,100 nominal lumens and 132 to 149 lumens per watt (LPW).**
- *Universal 120-277 AC voltage (50-60Hz) is standard.*
- *0-10vdc dimming drivers are standard.*
- *Power factor > 0.90.*
- *Total harmonic distortion < 20%.*
- *Color rendering index > 80.*
- *Steel housing and PMMA lens.*
- *Optional emergency drivers and occupancy sensors are available.*
- *Easy installation in new construction or retrofit.*

** Contact factory for other color temperatures and lumen packages.*
*** L_{70} hours are IES TM-21-11 calculated hours.*

WARRANTY & LISTINGS

- *cULus approved for damp locations in ambient temperatures from -20°C to 50°C (-4°F to 122°F).*
- *DLC approved.*
- *Complies with FCC Part 15, Class A.*
- *Complies with IEEE C.62.41-1991, Class A input transient surge protection (1.0kV).*
- *5-year warranty of all electronics and housing.*

DIMENSIONS

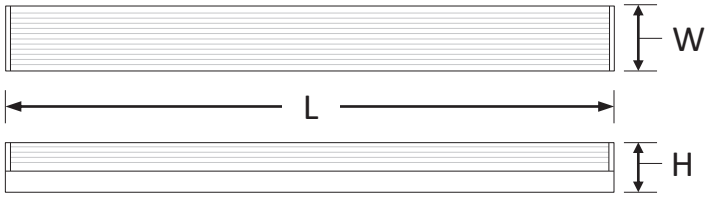

	SL-4FT-LKFS	SL-8FT-LKFS
L	47.3"	94.2"
W	3.3"	3.3"
H	3.5"	3.5"
Weight (lbs)	4.5	9

ORDERING INFORMATION

Example: SL-4FT-5L-LKFS-ODS-EM10

Series	Length	Nominal Lumen Output		Select	Occupancy Sensor [1 2]		Internally Installed Emergency Drivers [3]	
SL	4FT	5L	5,000 nominal lumens	LKFS	OS	Passive infrared	EM5	650 lumens
	8FT				ODS	Microwave	EM10	1,390 lumens
		10L	10,000 nominal lumens		Blank	No occupancy sensor	EM13	1,780 lumens
							Blank	No emergency driver

[1] Contact factory for other sensors.
[2] OS = passive infrared technology – features include on/off only. ODS = microwave technology – features include on/off, step-dimming, and daylight threshold. Default sensor settings: detection area = 100%, hold time = 5 seconds, stand-by period = 0 seconds, stand-by dimming level = 10%, daylight threshold = disabled. Remote control optional but not required, part number = HD03R.
[3] See emergency driver compatibility list (page 2).

COMPATIBLE EMERGENCY DRIVERS*

Emergency Driver Part Number	EM5		EM10		EM13	
Model	Watts	EM Lumens	Watts	EM Lumens	Watts	EM Lumens
SL-4FT-5L-LKFS	5.0	760	10.7	1627	13.7	2083
SL-8FT-10L-LKFS	5.0	760	10.7	1627	13.7	2083

* Suitable for ambient temperatures above 10°C (50°F).

COMPATIBLE EMERGENCY DRIVERS INTERNALLY INSTALLED [1 2]

Model	Emergency Options
SL-4FT-5L-LKFS SL-8FT-10L-LKFS	EM5 EM10 EM13

[1] Suitable for ambient temperatures above 10°C (50°F).
[2] For list of remote mountable emergency drivers, see *ACCESSORIES.*

ACCESSORIES (Order Separately)

Remote Mount Emergency Drivers*

BLEM-CP-5C = Emergency driver - EM5
BLEM-CP-10C = Emergency driver - EM10
BLEM-CP-13C = Emergency driver - EM13

Wire Guard

SL-4FT-WG = Wire-guard kit – 4FT

* Suitable for ambient temperatures above 10°C (50°F).

COMPATIBLE DIMMERS & CONTROLS

Manufacturer	Model Number	Dimming Range	Load Switching Capacity
Americanlite	DWS-010V-T	10%-100%	600W
Americanlite	DWS-010V-D	10%-100%	600W
Leviton	IP710-LFZ	10%-100%	1200W
Lutron	DVSTV	10%-100%	450W

ELECTRICAL DATA

Series	Measurements	Low Lumens			Mid Lumens			High Lumens		
		3500K	4000K	5000K	3500K	4000K	5000K	3500K	4000K	5000K
SL-4FT-LKFS	Lumens	3690	3631	3722	4336	4317	4389	4876	5203	4908
	Watts	26	25	26	31	30	31	35	34	35
	Efficacy	143	143	144	140	143	142	138	152	139
	Input Current (A)	120V = 0.22A	120V = 0.21A	120V = 0.22A	120V = 0.26A	120V = 0.25A	120V = 0.26A	120V = 0.29A	120V = 0.28A	120V = 0.29A
		240V = 0.11A	240V = 0.10A	240V = 0.11A	240V = 0.13A	240V = 0.13A	240V = 0.13A	240V = 0.15A	240V = 0.14A	240V = 0.15A
		277V = 0.09A	277V = 0.09A	277V = 0.09A	277V = 0.11A	277V = 0.11A	277V = 0.11A	277V = 0.13A	277V = 0.12A	277V = 0.13A

Series	Measurements	Low Lumens			Mid Lumens			High Lumens		
		3500K	4000K	5000K	3500K	4000K	5000K	3500K	4000K	5000K
SL-8FT-LKFS	Lumens	7251	7135	7314	8520	8483	8624	9553	10,124	9619
	Watts	55	55	55	60	60	60	70	68	70
	Efficacy	132	130	133	142	141	144	136	149	137
	Input Current (A)	120V = 0.46A	120V = 0.46A	120V = 0.46A	120V = 0.50A	120V = 0.50A	120V = 0.50A	120V = 0.58A	120V = 0.57A	120V = 0.58A
		240V = 0.23A	240V = 0.23A	240V = 0.23A	240V = 0.25A	240V = 0.25A	240V = 0.25A	240V = 0.29A	240V = 0.28A	240V = 0.29A
		277V = 0.20A	277V = 0.20A	277V = 0.20A	277V = 0.22A	277V = 0.22A	277V = 0.22A	277V = 0.25A	277V = 0.25A	277V = 0.25A

PHOTOMETRIC DATA

SL-4FT-5L-LKFS

Luminaire Data

Description	4' Strip Light 5L 5K - LKFS
Total Lumens	4,908
Input Wattage	35
Efficacy (lm/W)	139
Spacing Criterion (0-180°)	1.24
Spacing Criterion (90-270°)	1.36

Zonal Lumen Summary

Zone	Lumens	%Fixt
0-20°	470	9.6%
0-30°	1,002	20.4%
0-40°	1,653	33.7%
20-50°	1,877	38.2%
40-70°	1,927	39.3%
0-60°	3,009	61.3%
0-80°	4,024	82.0%
0-90°	4,338	88.4%
90-180°	570	11.6%
0-180°	4,908	100.0%

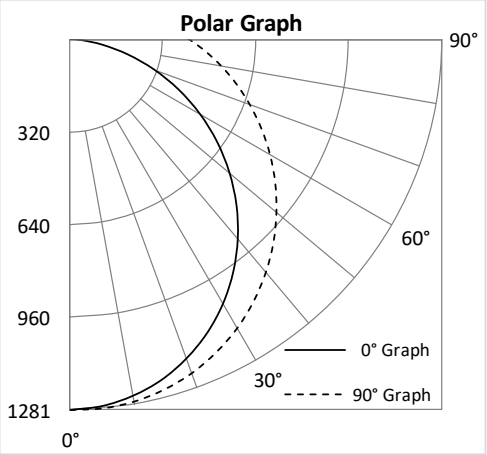

SLS-LKFS

americanlite

Lumen and Kelvin Field Selectable Strip Light Slim

STANDARD

CERTIFIED | DLC LISTED | FCC | DAMP | 1.0kV Surge Protection

FEATURES

- *Field selectable 3500k (warm/neutral white), 4000k (neutral white), and 5000k (cool white) color temperatures.**
- *Long-life LEDs provide 196,000 hours of operation with at least 70% of initial lumen output (L_{70}), and 60,000 hours with at least 90% of initial lumen output (L_{90}).***
- *LED chromaticity based on ≤ 4-step ANSI quadrangles.*
- *LED color maintenance ≤ 0.002 chromaticity shift (Δu'v') over the initial 6,000 hours of operation.*
- *SLS-4FT-5L-LKFS provides a range of 3,500 to 5,000 nominal lumens.**
- *Universal 120-277 AC voltage (50-60Hz) is standard.*
- *0-10vdc dimming drivers are standard.*
- *Power factor > 0.90.*
- *Total harmonic distortion < 20%.*
- *Color rendering index > 80.*
- *Steel housing and PMMA lens.*
- *Optional emergency drivers and occupancy sensors are available.*
- *Easy installation in new construction or retrofit.*

** Contact factory for other color temperatures and lumen packages.*
*** L_{70} hours are IES TM-21-11 calculated hours.*

WARRANTY & LISTINGS

- *cULus approved for damp locations in ambient temperatures from -20°C to 50°C (-4°F to 122°F).*
- *DLC approved.*
- *Complies with FCC Part 15, Class A.*
- *Complies with IEEE C.62.41-1991, Class A input transient surge protection (1.0kV).*
- *5-year warranty of all electronics and housing.*

DIMENSIONS

L	47.3"
W	2.4"
H	2.8"
Weight (lbs)	3.7

ORDERING INFORMATION

Example: SLS-4FT-5L-LKFS-OS-EM10

Series	Length	Nominal Lumen Output		Select	Occupancy Sensor [1 2]		Internally Installed Emergency Drivers [3]	
SLS	4FT	5L	5,000 nominal lumens	LKFS	OS	Passive infrared	EM10	1,390 lumens
					Blank	No occupancy sensor	EM13	1,780 lumens
							Blank	No emergency driver

[1] Contact factory for other sensors.
[2] OS = passive infrared technology – features include on/off only.
[3] See emergency driver compatibility list (page 2).

COMPATIBLE EMERGENCY DRIVERS*

Emergency Driver Part Number	EM10		EM13		Runtime
Model	Watts	EM Lumens	Watts	EM Lumens	
SLS-4FT-5L-LKFS	10.7	1391	13.7	1781	90 MINS.

* Suitable for ambient temperatures above 10°C (50°F).

COMPATIBLE EMERGENCY DRIVERS INTERNALLY INSTALLED [1 2]

Model	Emergency Options
SLS-4FT-5L-LKFS	EM10 EM13

[1] Suitable for ambient temperatures above 10°C (50°F).
[2] For list of remote mountable emergency drivers, see *ACCESSORIES.*

ACCESSORIES (Order Separately)

Remote Mount Emergency Drivers*

BLEM-CP-10C = Emergency driver - EM10
BLEM-CP-13C = Emergency driver - EM13
* Suitable for ambient temperatures above 10°C (50°F).

COMPATIBLE DIMMERS & CONTROLS

Manufacturer	Model Number	Dimming Range	Load Switching Capacity
Americanlite	DWS-010V-T	10%-100%	600W
Americanlite	DWS-010V-D	10%-100%	600W
Leviton	IP710-LFZ	10%-100%	1200W
Lutron	DVSTV	10%-100%	450W

ELECTRICAL DATA

Series	Measurements	Low Lumens			Mid Lumens			High Lumens		
		3500K	4000K	5000K	3500K	4000K	5000K	3500K	4000K	5000K
SLS-4FT-LKFS	Lumens	3555	3622	3590	4206	4305	4258	4719	5025	4804
	Watts	25	25	25	30	30	30	34	33	35
	Efficacy	142	143	144	140	143	142	137	151	139
	Input Current (A)	120V = 0.21A	120V = 0.21A	120V = 0.21A	120V = 0.25A	120V = 0.25A	120V = 0.25A	120V = 0.28A	120V = 0.28A	120V = 0.29A
		240V = 0.10A	240V = 0.10A	240V = 0.10A	240V = 0.13A	240V = 0.13A	240V = 0.13A	240V = 0.14A	240V = 0.14A	240V = 0.15A
		277V = 0.09A	277V = 0.09A	277V = 0.09A	277V = 0.11A	277V = 0.11A	277V = 0.11A	277V = 0.12A	277V = 0.12A	277V = 0.13A

PHOTOMETRIC DATA

SLS-4FT-LKFS

Luminaire Data

Description	4' Strip Light Slim 5L- 5K - LKFS
Total Lumens	4,804
Input Wattage	34
Efficacy (lm/W)	140
Spacing Criterion (0-180°)	1.24
Spacing Criterion (90-270°)	1.34

Zonal Lumen Summary

Zone	Lumens	%Fixt
0-20°	492	10.2%
0-30°	1,049	21.8%
0-40°	1,725	35.9%
20-50°	1,948	40.5%
40-70°	1,949	40.6%
0-60°	3,111	64.8%
0-80°	4,095	85.2%
0-90°	4,372	91.0%
90-180°	432	9.0%
0-180°	4,804	100.0%

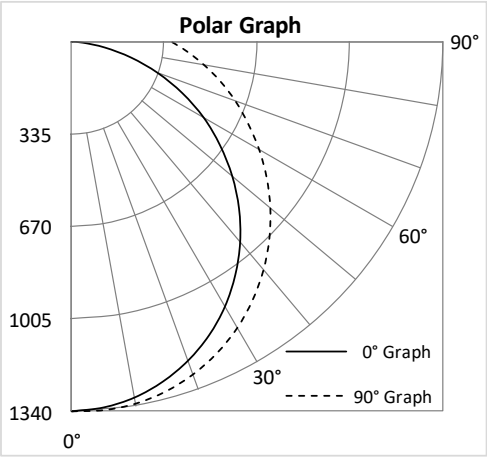

Strip LightLumen/Kelvin Selectable & Sensor Ready

STANDARDS

CERTIFIED · DLC LISTED · FCC · DAMP · 2.5kV Surge Protection

HOUSING

- White powder-coated steel housing.

ELECTRICAL

- Operating temperature (ambient): Up to 50°C (122°F).
- Universal 120-277V AC voltage (50-60Hz).
- 0-10VDC dimming driver.
- Emergency driver option available.
- Input transient surge protection = 2.5kV.
- Power Factor > 0.90.
- Total Harmonic Distortion < 20%.

OPTICAL SYSTEM

- Efficacy up to 165 Lumens per Watt.
- Field selectable 3000K, 3500, 4000K, 5000K, and 6500K color temperatures.*
- SLSR4-5432L-5CCT Selectable output delivers from 2,600 to 5,239 nominal lumens, with 4 settings.*
- SLSR4-131087L-5CCT Selectable output delivers from 6,398 to 12,577 nominal lumens, with 4 settings.*
- SLSR8-10865L-5CCT Selectable output delivers from 5,067 to 9,958 nominal lumens, with 4 settings.*
- SLSR8-21171513L-5CCT Selectable output delivers from 13,425 to 21,514 nominal lumens, with 4 settings.*
- Long-life LEDs provide 165,000 hours of operation with at least 70% of initial lumen output (L70), and 50,000 hours with at least 90% of initial lumen output (L90)**.
- Sensor-ready quick connect comes standard. Push-in quick connect microwave sensor (sold separately).
- LED color maintenance < 0.0008 chromaticity shift (Δu'v') over the initial 6,000 hours of operation.
- PMMA (polymethyl methacrylate) frosted lens.
- Color rendering index > 80.

* Factory set to 4000K CCT & highest power setting.
**L70 & L90 hours are IES TM-21-11 calculated hours.

MOUNTING

- Surface Mount Kit.
- Optional Cable Mount Kit.
- Chain-mount kit (includes v-hooks , 1-meter long chain).

CODE COMPLIANCE

- cULus listed for damp locations.
- DLC standard listed.
- Complies with FCC Part 15, Class A.

WARRANTY

- 5 year warranty on all electronics and housing.

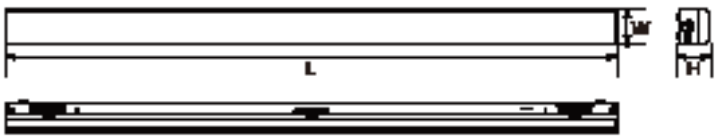

Model #	L (in)	W (in)	H (in)	Weight (lbs)
SLSR4-5432L-5CCT/ SLSR4-131087L-5CCT	47.32	2.83	2.52	4.24
SLSR8-10865L-5CCT/ SLSR8-21171513L-5CCT	94.17	2.83	2.52	8.57

ORDERING INFORMATION

Example: SLSR4-5432L-5CCT

Series	Nominal Lumen Output (Selectable)		Kelvin (Selectable)		Emergency Driver	
SLSR4	5432L	5,000/4,000/3,000/2,000 lm	5CCT	3000/3500/4000/5000/6500K	EM5	5W Emergency Driver
	131087L	13,000/10,000/8,000/7,000 lm				
SLSR8	10865L	10,000/8,000/6,000/5,000 lm			EM10	10W Emergency Driver
	21171513L	21,000/17,000/15,000/13,000 lm				

August 6, 2026

ACCESSORIES (ORDER SEPARATELY)

Sensor

HSE-SM3L-5H	=	Microwave Occupancy Sensor, 120-277V, 0-10V Step Dim, Day Threashold, Max Mouting Height=19ft
HD05R	=	Remote control for HD09VR series (required to change factory settings). HD09VR series has 5-dial setting capability. Factory Settings: detection area=100%, hold time=5s, stand-by period=0s, stand by dim level=10%, daylight threshold=disabled

Wire Guard

SLSR-4FT-WG	=	4FT Wire guard for SLSR Series, White

Glare Shield

SL-GLARESHIELD-4FT	=	4FT glare shield for SLSR Series, White

Lens

ZZ-LENS-SLSR4	=	Replacement Lens for SLSR-4FT
ZZ-LENS-SLSR8	=	Replacement Lens for SLSR-8FT

Mounting Option

SLSR-CHAIN	=	Chain Mount Kit for SLSR Series
SLSR-SMKT	=	Surface Mount for SLSR Series, includes two brackets and hardware
CMK-3	=	Cable Mount Kit - 3 Meter
CMK-5	=	Cable Mount Kit - 5 Meter
SLSR-CONNECT-BRKT	=	End To End Connecting Bracket for SLSR Series, includes one bracket, White
SLSR-CORNER-BRKT	=	Corner Mount Bracket for SLSR Series, includes one bracket, White
	=	Strut Mount Bracket

Remote Mount EM Drivers

BLEM-CP-5C	=	5W Emergency Driver W/Conduit - EM5
BLEM-CP-10C	=	10W Emergency Driver W/Conduit - EM10
BLEM-CP-13C	=	13W Emergency Driver W/Conduit - EM13
BLEM-INDRV-HV25W	=	25W Emergency Driver - EM25
BLEM-INDRV-HV40W	=	40W Emergency Driver - EM40

COMPATIBLE EMERGENCY DRIVERS-INSTALLED

Emergency Driver Part Number	EM5		EM10	
Model	Watts	EM Lumens	Watts	EM Lumens
SLSR4-5432L-5CCT	5	835	10	1,670
SLSR4-131087L-5CCT	5	830	10	1,660
SLSR8-10865L-5CCT	5	830	10	1,660
SLSR8-21171513L-5CCT	5	805	10	1,610

COMPATIBLE DIMMERS AND CONTROLS

Manufacturer	Model Number	Style	Dimmer Range	Load Switching Capacity
Best Lighting	DWS-010V-T	Toggle	10%-100%	600W
Best Lighting	DWS-010V-D	Decora	10%-100%	600W
Best Lighting	GPDMLV-02-3	Toggle	10%-100%	600W
Best Lighting	GPDMLV-12-3	Decora	10%-100%	600W
Leviton	IP710-LFZ	Toggle	10%-100%	1200W
Lutron	DVSTV	Decora	10%-100%	450W

LUMEN TABLES & ELECTRICAL DATA

Series	Measure-ments		5L					4L				
			3000K	3500K	4000K	5000K	6500K	3000K	3500K	4000K	5000K	6500K
SLSR4-5432L-5CCT	Lumens		5,080	5,154	5,239	5,217	5,060	4,035	4,106	4,147	4,142	4,039
	Watts		33.7	33.2	32.7	32.8	33.5	26.1	25.7	25.4	25.5	25.9
	Efficacy		151	155	160	159	151	155	160	163	163	156
	Input Current (A)	120V	0.28	0.28	0.27	0.27	0.28	0.22	0.21	0.21	0.21	0.22
		240V	0.14	0.14	0.14	0.14	0.14	0.11	0.11	0.11	0.11	0.11
		277V	0.12	0.12	0.12	0.12	0.12	0.09	0.09	0.09	0.09	0.09

Series	Measure-ments		3L					2L				
			3000K	3500K	4000K	5000K	6500K	3000K	3500K	4000K	5000K	6500K
SLSR4-5432L-5CCT	Lumens		3,313	3,380	3,405	3,389	3,335	2,606	2,615	2,640	2,632	2,600
	Watts		20.8	20.6	20.4	20.4	20.7	16.1	15.9	15.8	15.8	16.0
	Efficacy		159	164	167	166	161	162	164	168	167	162
	Input Current (A)	120V	0.17	0.17	0.17	0.17	0.17	0.13	0.13	0.13	0.13	0.13
		240V	0.09	0.09	0.08	0.09	0.09	0.07	0.07	0.07	0.07	0.07
		277V	0.08	0.07	0.07	0.07	0.07	0.06	0.06	0.06	0.06	0.06

Series	Measure-ments		13L					10L				
			3000K	3500K	4000K	5000K	6500K	3000K	3500K	4000K	5000K	6500K
SLSR4-131087L-5CCT	Lumens		12,315	12,564	12,569	12,577	12,551	10,325	10,420	10,449	10,420	10,394
	Watts		81.6	82.2	82.2	82.2	82.3	66.3	66.3	66.4	66.3	66.4
	Efficacy		151	153	153	153	153	156	157	157	157	157
	Input Current (A)	120V	0.68	0.68	0.68	0.69	0.69	0.55	0.55	0.55	0.55	0.55
		240V	0.34	0.34	0.34	0.34	0.34	0.28	0.28	0.28	0.28	0.28
		277V	0.29	0.30	0.30	0.30	0.30	0.24	0.24	0.24	0.24	0.24

Series	Measure-ments		8L					7L				
			3000K	3500K	4000K	5000K	6500K	3000K	3500K	4000K	5000K	6500K
SLSR4-131087L-5CCT	Lumens		8,351	8,403	8,422	8,465	8,476	6,398	6,429	6,418	6,464	6,486
	Watts		52.4	52.3	52.4	52.4	52.5	39.0	39.0	39.0	39.0	39.0
	Efficacy		160	161	161	162	162	164	165	165	166	166
	Input Current (A)	120V	0.44	0.44	0.44	0.44	0.44	0.33	0.33	0.32	0.32	0.33
		240V	0.22	0.22	0.22	0.22	0.22	0.16	0.16	0.16	0.16	0.16
		277V	0.19	0.19	0.19	0.19	0.19	0.14	0.14	0.14	0.14	0.14

Series	Measure-ments		10L					5L				
			3000K	3500K	4000K	5000K	6500K	3000K	3500K	4000K	5000K	6500K
SLSR8-10865L-5CCT	Lumens		9,741	9,849	9,958	9,891	9,638	7,810	7,931	8,011	7,970	7,834
	Watts		66.1	64.9	63.8	64.5	65.7	51.2	50.6	49.9	50.4	51.2
	Efficacy		147	152	156	153	147	152	157	161	158	153
	Input Current (A)	120V	0.55	0.54	0.53	0.54	0.55	0.43	0.42	0.42	0.42	0.43
		240V	0.28	0.27	0.27	0.27	0.27	0.21	0.21	0.21	0.21	0.21
		277V	0.24	0.23	0.23	0.23	0.24	0.18	0.18	0.18	0.18	0.18

Series	Measure-ments		6L					5L				
			3000K	3500K	4000K	5000K	6500K	3000K	3500K	4000K	5000K	6500K
SLSR8-10865L-5CCT	Lumens		6,132	6,205	6,241	6,233	6,162	5,067	5,121	5,144	5,142	5,083
	Watts		38.9	38.4	38.1	38.3	39.0	31.5	31.2	30.9	31.1	31.5
	Efficacy		158	161	164	163	158	161	164	166	165	161
	Input Current (A)	120V	0.32	0.32	0.32	0.32	0.33	0.26	0.26	0.26	0.26	0.26
		240V	0.16	0.16	0.16	0.16	0.16	0.13	0.13	0.13	0.13	0.13
		277V	0.14	0.14	0.14	0.14	0.14	0.11	0.11	0.11	0.11	0.11

Series	Measure-ments		21L					17L				
			3000K	3500K	4000K	5000K	6500K	3000K	3500K	4000K	5000K	6500K
SLSR8-21171513L-5CCT	Lumens		21,031	21,401	21,514	21,455	21,416	16,906	17,066	17,084	17,111	17,107
	Watts		143.9	145.5	145.5	145.4	145.2	110.3	110.5	110.5	110.5	110.4
	Efficacy		146	147	148	148	147	153	154	155	155	155
	Input Current (A)	120V	1.20	1.21	1.21	1.21	1.21	0.92	0.92	0.92	0.92	0.92
		240V	0.60	0.61	0.61	0.61	0.61	0.46	0.46	0.46	0.46	0.46
		277V	0.52	0.53	0.53	0.52	0.52	0.40	0.40	0.40	0.40	0.40

Series	Measure-ments		15L					13L				
			3000K	3500K	4000K	5000K	6500K	3000K	3500K	4000K	5000K	6500K
SLSR8-21171513L-5CCT	Lumens		15,540	15,573	15,611	15,684	15,724	13,448	13,455	13,425	13,467	13,463
	Watts		99.5	99.6	99.6	99.5	99.5	83.8	83.8	83.8	83.8	83.7
	Efficacy		156	156	157	158	158	161	161	160	161	161
	Input Current (A)	120V	0.83	0.83	0.83	0.83	0.83	0.70	0.70	0.70	0.70	0.70
		240V	0.41	0.42	0.42	0.41	0.41	0.35	0.35	0.35	0.35	0.35
		277V	0.36	0.36	0.36	0.36	0.36	0.30	0.30	0.30	0.30	0.30

PHOTOMETRICS

SLSR4-5432L-5CCT

Luminaire Data

Description	4' Strip Light Lumen and Kelvin Select
Total Lumens	5,367
Input Wattage	33
Efficacy (lm/W)	165
Spacing Criterion (0-180°)	1.28
Spacing Criterion (90-270°)	1.32

*Photometrics generated @4000K and highest lumen output.

Zonal Lumen Summary

Zone	Lumens	%Fixt
0-20°	544	10.1%
0-30°	1,164	21.7%
0-40°	1,930	36.0%
20-50°	2,203	41.0%
40-70°	2,234	41.6%
0-60°	3,520	65.6%
0-80°	4,616	86.0%
0-90°	4,876	90.9%
90-180°	491	9.1%
0-180°	5,367	100.0%

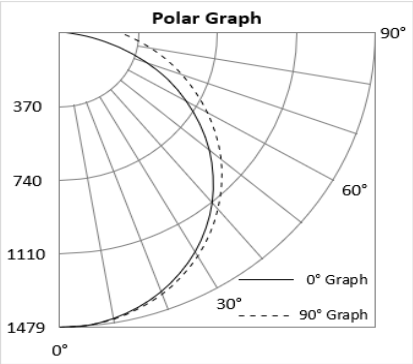

SLSR4-131087L-5CCT

Luminaire Data

Description	4' Strip Light High Output Lumen and Kelvin Select
Total Lumens	12,304
Input Wattage	81
Efficacy (lm/W)	151
Spacing Criterion (0-180°)	1.28
Spacing Criterion (90-270°)	1.32

Photometrics generated @4000K and highest lumen output.

Zonal Lumen Summary

Zone	Lumens	%Fixt
0-20°	1,253	10.2%
0-30°	2,678	21.8%
0-40°	4,427	36.0%
20-50°	5,039	41.0%
40-70°	5,092	41.4%
0-60°	8,055	65.5%
0-80°	10,553	85.8%
0-90°	11,153	90.6%
90-180°	1,151	9.4%
0-180°	12,304	100.0%

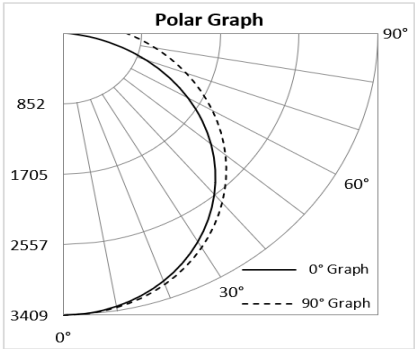

SLSR8-10865L-5CCT

Luminaire Data

Description	8' Strip Light Lumen and Kelvin Select
Total Lumens	10,734
Input Wattage	68
Efficacy (lm/W)	158
Spacing Criterion (0-180°)	1.28
Spacing Criterion (90-270°)	1.32

*Photometrics generated @4000K and highest lumen output.

Zonal Lumen Summary

Zone	Lumens	%Fixt
0-20°	1,088	10.1%
0-30°	2,329	21.7%
0-40°	3,859	36.0%
20-50°	4,405	41.0%
40-70°	4,467	41.6%
0-60°	7,040	65.6%
0-80°	9,233	86.0%
0-90°	9,753	90.9%
90-180°	981	9.1%
0-180°	10,734	100.0%

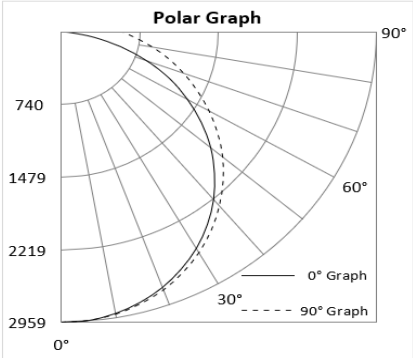

SLSR8-21171513L-5CCT

Luminaire Data

Description	8' Strip Light High Output Lumen and Kelvin Select
Total Lumens	20,647
Input Wattage	136
Efficacy (lm/W)	152
Spacing Criterion (0-180°)	1.28
Spacing Criterion (90-270°)	1.32

Photometrics generated @4000K and highest lumen output.

Zonal Lumen Summary

Zone	Lumens	%Fixt
0-20°	2,108	10.2%
0-30°	4,506	21.8%
0-40°	7,449	36.1%
20-50°	8,478	41.1%
40-70°	8,562	41.5%
0-60°	13,548	65.6%
0-80°	17,742	85.9%
0-90°	18,739	90.8%
90-180°	1,908	9.2%
0-180°	20,647	100.0%

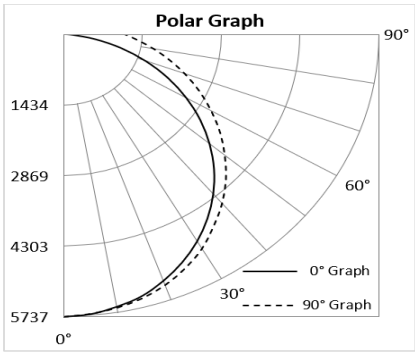

BRANCH WIRING OPTIONS

When ordering a plug, use the following suffix choices.
Example: SLSR4-5432L-5CCT-6C3
Note: Cords & Plugs do not affect the ability to install sensors.

Part number suffix	Description	For use with
6C3	6' cord - 3 conductor (black/white/green)	Standard
6C4	6' cord - 4 conductor (black/white/green/red)	EM driver
6C5	6' cord - 5 conductor (black/white/green/purple/pink)	Dimming (standard)
6C6	6' cord - 6 conductor (black/white/green/red/purple/pink)	Dimming & EM driver
10C3	10' cord - 3 conductor (black/white/green)	Standard
10C4	10' cord - 4 conductor (black/white/green/red)	EM driver
10C5	10' cord - 5 conductor (black/white/green/purple/pink)	Dimming (standard)
10C6	10' cord - 6 conductor (black/white/green/red/purple/pink)	Dimming & EM driver
15C3	15' cord - 3 conductor (black/white/green)	Standard
15C4	15' cord - 4 conductor (black/white/green/red)	EM driver
15C5	15' cord - 5 conductor (black/white/green/purple/pink)	Dimming (standard)
15C6	15' cord - 6 conductor (black/white/green/red/purple/pink)	Dimming & EM driver
6W3	6' whip - 3 conductor (black/white/green)	Standard
6W4	6' whip - 4 conductor (black/white/green/red)	EM driver
6W5	6' whip - 5 conductor (black/white/green/purple/pink)	Dimming (standard)
6W6	6' whip - 6 conductor (black/white/green/red/purple/pink)	Dimming & EM driver
6P515	6' cord - 3 conductor (black/white/green) - NEMA 5-15 plug (120V/15A)	Standard luminaire
6P615	6' cord - 3 conductor (black/white/green) - NEMA 6-15 plug (240V/15A)	Standard luminaire
6P715	6' cord - 3 conductor (black/white/green) - NEMA 7-15 plug (277V/15A)	Standard luminaire
6P520	6' cord - 3 conductor (black/white/green) - NEMA 5-20 plug (120V/20A)	Standard luminaire
6P620	6' cord - 3 conductor (black/white/green) - NEMA 6-20 plug (277V/20A)	Standard luminaire
6P515L	6' cord - 3 conductor (black/white/green) - NEMA L5-15 plug (120V/15A locking)	Standard luminaire
6P615L	6' cord - 3 conductor (black/white/green) - NEMA L6-15 plug (240V/15A locking)	Standard luminaire
6P715L	6' cord - 3 conductor (black/white/green) - NEMA L7-15 plug (277V/15A locking)	Standard luminaire
6P520L	6' cord - 3 conductor (black/white/green) - NEMA L5-20 plug (120V/20A locking)	Standard luminaire
6P620L	6' cord - 3 conductor (black/white/green) - NEMA L6-20 plug (240V/20A locking)	Standard luminaire
6P720L	6' cord - 3 conductor (black/white/green) - NEMA L7-20 plug (277V/20A locking)	Standard luminaire
10P515	10' cord - 3 conductor (black/white/green) - NEMA 5-15 plug (120V/15A)	Standard luminaire
10P615	10' cord - 3 conductor (black/white/green) - NEMA 6-15 plug (240V/15A)	Standard luminaire

Part number suffix	Description	For use with
10P715L	10' cord - 3 conductor (black/white/green) - NEMA L7-15 plug (277V/15A locking)	Standard luminaire
10P520L	10' cord - 3 conductor (black/white/green) - NEMA L5-20 plug (120V/20A locking)	Standard luminaire
10P620L	10' cord - 3 conductor (black/white/green) - NEMA L6-20 plug (240V/20A locking)	Standard luminaire
10P720L	10' cord - 3 conductor (black/white/green) - NEMA L7-20 plug (277V/20A locking)	Standard luminaire
15P515	15' cord - 3 conductor (black/white/green) - NEMA 5-15 plug (120V/15A)	Standard luminaire
15P615	15' cord - 3 conductor (black/white/green) - NEMA 6-15 plug (240V/15A)	Standard luminaire
15P715	15' cord - 3 conductor (black/white/green) - NEMA 7-15 plug (277V/15A)	Standard luminaire
15P520	15' cord - 3 conductor (black/white/green) - NEMA 5-20 plug (120V/20A)	Standard luminaire
15P620	15' cord - 3 conductor (black/white/green) - NEMA 6-20 plug (277V/20A)	Standard luminaire
15P515L	15' cord - 3 conductor (black/white/green) - NEMA L5-15 plug (120V/15A locking)	Standard luminaire
15P615L	15' cord - 3 conductor (black/white/green) - NEMA L6-15 plug (240V/15A locking)	Standard luminaire
15P715L	15' cord - 3 conductor (black/white/green) - NEMA L7-15 plug (277V/15A locking)	Standard luminaire
15P520L	15' cord - 3 conductor (black/white/green) - NEMA L5-20 plug (120V/20A locking)	Standard luminaire
15P620L	15' cord - 3 conductor (black/white/green) - NEMA L6-20 plug (240V/20A locking)	Standard luminaire
15P720L	15' cord - 3 conductor (black/white/green) - NEMA L7-20 plug (277V/20A locking)	Standard luminaire

LED Panel and Troffer

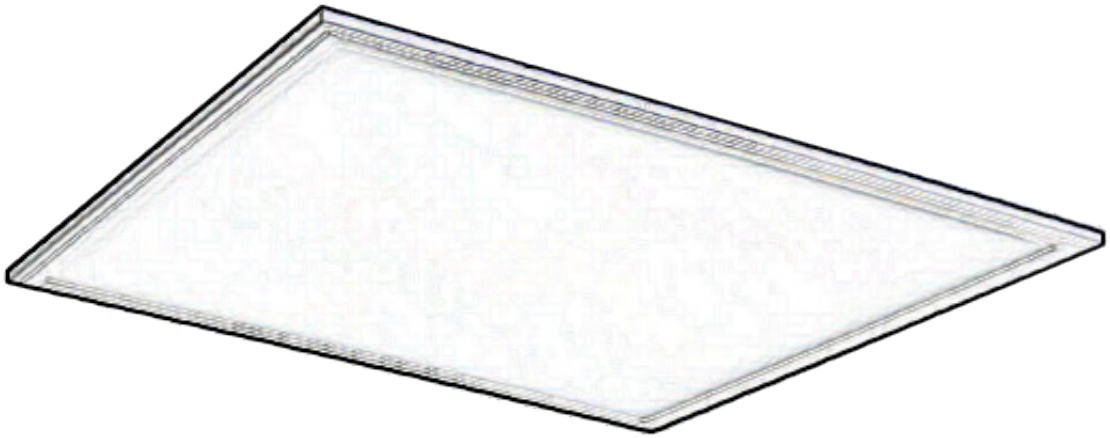

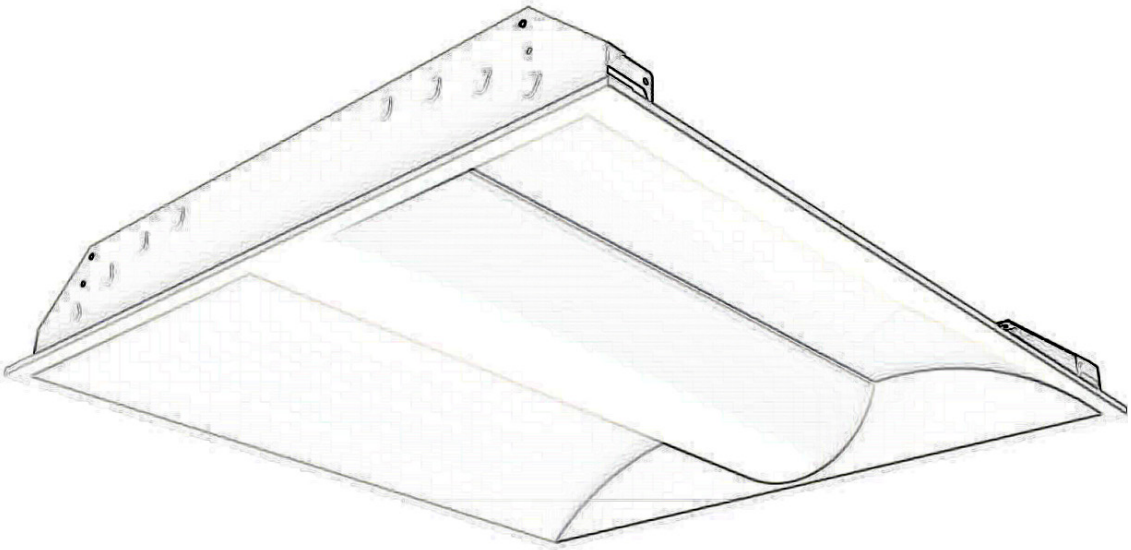

48" x 4" Back-Lit LED Panel
Lumen & Kelvin Field Selectable

STANDARDS

Intertek | FCC | DAMP | 1kV Surge Protection

HOUSING

- White powder-coated steel housing.

ELECTRICAL

- Universal 120-277V AC voltage (50-60Hz).
- 0-10VDC dimming driver.
- Input transient surge protection = 1kV.
- Power Factor > 0.9.
- Total Harmonic Distortion < 20%.

OPTICAL SYSTEM

- Efficacy 140 Lumens per Watt.
- Field selectable 2700K, 3000K, 3500K, 4000K, 5000K, and 6500K color temperatures.*
- Selectable output delivers from 2,536 to 5,125 nominal lumens, with 3 settings.*
- Long-life LEDs provide 175,000 hours of operation with at least 70% of initial lumen output (L70), and 54,000 hours with at least 90% of initial lumen output (L90).**
- LED color maintenance <-0.0006 chromaticity shift (Δu’v’) over the initial 6,000 hours of operation.
- Beam Angle 110°.
- Plastic lens.
- Color rendering index > 80.

* Factory set to 4000K CCT & highest lumen output. **L70 & L90 hours are IES TM-21-11 calculated hours.

NOTE: Actual performance may differ as a result of end-user environment and application. All values are design or typical values, measured under laboratory conditions of 25-degrees C

MOUNTING

- Recessed mounting (T-grid) is standard.

CODE COMPLIANCE

- cETLus listed for damp locations. [1]
- Complies with FCC Part 15, Class A.

WARRANTY

- 5 year warranty on all electronics and housing.

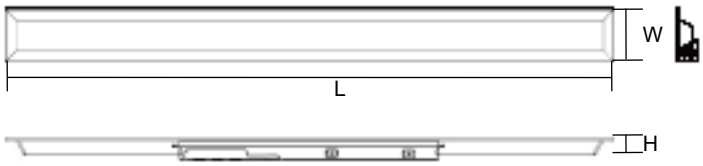

Model #	L (in)	W (in)	H (in)	Weight (lbs)
BPX6W4L4-40-8SCCT	47.73	4.02	1.74	2.76

ORDERING INFORMATION

Example: BPX6W4L4-40-8SCCT

Series	Nominal Lumen Output (Selectable)	Kelvin Temperature (Selectable)
BPX6W4L4-40-8SCCT	2,500/3750/5000 Lumens	2700/3000/3500/4000/5000/6500K

COMPATIBLE DIMMERS AND CONTROLS

Manufacturer	Model Number	Style	Dimmer Range	Load Switching Capacity
Best Lighting	DWS-010V-T	Toggle	10%-100%	600W
Best Lighting	DWS-010V-D	Decora	10%-100%	600W
Best Lighting	GPDMLV-02-3	Toggle	10%-100%	600W
Best Lighting	GPDMLV-12-3	Decora	10%-100%	600W
Leviton	IP710-LFZ	Toggle	10%-100%	1200W
Lutron	DVSTV	Decora	10%-100%	450W

LUMEN TABLES & ELECTRICAL DATA

Series	Measure-ments		40W						30W					
			2700K	3000K	3500K	4000K	5000K	6500K	2700K	3000K	3500K	4000K	5000K	6500K
BPX6W4L4-40-8SCCT	Lumens		5,008	4,874	4,930	4,986	5,068	5,125	3,742	3,778	3,816	3,891	3,922	3,969
	Watts		39.2	38.9	38.9	39.0	39.0	39.1	29.0	29.0	29.0	29.2	29.2	29.2
	Efficacy		128	125	127	128	130	131	129	130	131	133	135	136
	Input Current (A)	120V	0.33	0.32	0.32	0.32	0.33	0.33	0.24	0.24	0.24	0.24	0.24	0.24
		240V	0.16	0.16	0.16	0.16	0.16	0.16	0.12	0.12	0.12	0.12	0.12	0.12
		277V	0.14	0.14	0.14	0.14	0.14	0.14	0.10	0.10	0.10	0.11	0.11	0.11

Series	Measure-ments		20W					
			2700K	3000K	3500K	4000K	5000K	6500K
BPX6W4L4-40-8SCCT	Lumens		2,536	2,559	2,584	2,620	2,652	2,683
	Watts		19.1	19.1	19.1	19.1	19.1	19.1
	Efficacy		133	134	136	137	139	140
	Input Current (A)	120V	0.16	0.16	0.16	0.16	0.16	0.16
		240V	0.08	0.08	0.08	0.08	0.08	0.08
		277V	0.07	0.07	0.07	0.07	0.07	0.07

PHOTOMETRICS

BPX6W4L4-40-8SCCT

Luminaire Data

Description	Back Lit Panel 4" x 48" Lumen and Kelvin Select
Total Lumens	4,986
Input Wattage	39
Efficacy (lm/W)	128
Spacing Criterion (0-180°)	1.24
Spacing Criterion (90-270°)	1.26

Zonal Lumen Summary

Zone	Lumens	%Fixt
0-20°	643	12.9%
0-30°	1,364	27.3%
0-40°	2,226	44.6%
20-50°	2,470	49.5%
40-70°	2,291	46.0%
0-60°	3,909	78.4%
0-80°	4,877	97.8%
0-90°	4,986	100.0%
90-180°	0	0.0%
0-180°	4,986	100.0%

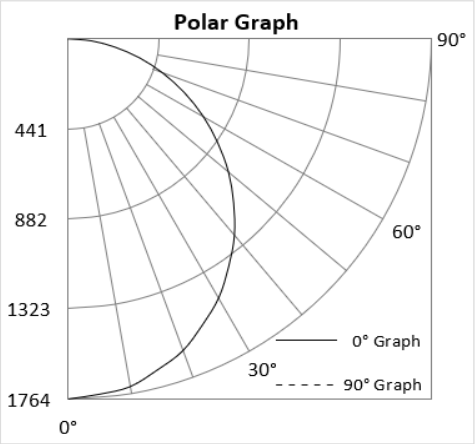

PNL2X4-High Lumen

americanlite®

2X4 Back-Lit LED panel
5-CCT

STANDARDS

HOUSING

- Steel frame and housing backplate.
- Premium powder coated white housing.

ELECTRICAL

- Operating temperature (ambient):-20°C to 45°C (-4°F to 113°F) .
- Universal 120-277V AC voltage (50-60Hz) is standard.
- 0-10VDC dimming drivers are standard.
- Input transient surge protection =1kV.
- Optional Emergency drivers are available.
- Type IC-rated.
- PF > 0.9 ; THD < 20%.

OPTICAL SYSTEM

- PMMA (Polymethyl methacrylate) LED lenses for optimal light distribution, efficiency and longevity.
- 5-CCT selectable 3000k (warm white),3500k 4000k (neutral white), 5000k (cool white) and 6500k (daylight) color temperature*.
- 5 Lumen selectable, outputs range from 4,000 to 9,000 nominal lumens*.
- Long-life LEDs provide 169,000 hours of operation with at least 70% of initial lumen output (L70), and 51,000 hours with at least 90% of initial lumen output (L90)**.
- LED color maintenance < -0.0043 chromaticity shift (Δu'v') over the initial 6,000 hours of operation.
- Color rendering index > 80.

* Default kelvin temperature 4000k and highest lumen output..
**L70 & L90 hours are IES TM-21-11 calculated hours.

MOUNTING

- Recessed mounting in grid ceilings is standard.
- Standard earthquake clips provide secure installation in grid ceilings.
- Optional Surface Mounting Kits (SMKT-24) and Flange Mounting Kits (FLANGEKIT24-ET) provide for installation on plaster or other hard ceilings.
- Optional Cable Mounting Kits (PNL-CMK) provide additional security, as well as suspended mounting.

CODE COMPLIANCE

- cULus listed for damp locations and insulated ceilings. Not exceeding 45°C (113°F).
- DLC premium listed.
- Complies with FCC part 15, class B.

WARRANTY

- 5 year warranty on all electronics and housing.

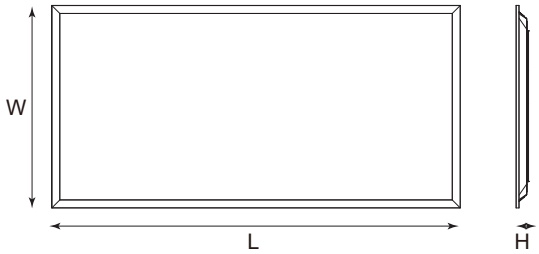

Model #	L (in)	W (in)	H (in)	Weight (lbs)
PNL2X4-98654L-5CCT-PRM	47.7	23.7	1.42	6.6
PNL2X4-98654L-5CCT-PRM-EM	47.7	23.7	1.42	7.85

ORDERING INFORMATION

Example: PNL2X4-98654L-5CCT-PRM

Series	Nominal Lumen Output (Selectable)		Kelvin Selectable	Emergency Driver
PNL2X4	98654L	9,000/ 8,000/ 6,000/ 5,000/ 4,000 lm	5CCT-PRM 3000K/ 3500K/ 4000K/ 5000K/ 6500K	EM Emergency Driver

ACCESSORIES (ORDER SEPARATELY)

Mounting O tion

SMKT-24	=	Surface Mount Kit for 2X4 Back-lit Panel.
FLANGEKIT24-ET	=	Recessed Flange Mount Kit for 2X4 Back-lit Panel.
PNL-CM	=	Cable Mount Kit for Back-lit Panel.
PNL-JBEXT	=	Junction Box Extender for 2X2 Back-lit Panel.

LUMEN TABLES

Series	Measure-ments	30W					40W					50W				
		3000K	3500K	4000K	5000K	6500K	3000K	3500K	4000K	5000K	6500K	3000K	3500K	4000K	5000K	6500K
PNL2X4-98654L-5CCT-PRM (-EM)	Lumens	4,035	4,068	4,091	4,051	3,995	5,316	5,509	5,520	5,453	5,348	6,438	6,650	6,709	6,624	6,465
	Watts	28.5	27.9	27.7	28	28.2	38.4	38.8	37.9	38.6	38.8	48.4	47.9	47	48.4	48.8
	Efficacy	141.58	145.81	147.69	144.68	141.67	138.44	141.98	145.65	141.27	137.84	133.02	138.83	142.74	136.86	132.48

Series	Measure-ments	60W					72W				
		3000K	3500K	4000K	5000K	6500K	3000K	3500K	4000K	5000K	6500K
PNL2X4-98654L-5CCT-PRM (-EM)	Lumens	7,512	7,813	7,908	7,783	7,555	8,630	9,016	9,127	8,948	8,736
	Watts	58.4	57.7	56.9	58.6	59.2	70.1	68.4	67.4	69.5	71
	Efficacy	128.63	135.41	138.98	132.82	127.62	123.11	131.81	135.42	128.75	123.04

ELECTRICAL DATA

Series	CCT	Input Amps (A)														
		30W			40W			50W			60W			72W		
		120V	240V	277V	120V	240V	277V	120V	240V	277V	120V	240V	277V	120V	240V	277V
PNL2X4-98654L-5CCT-PRM (-EM)	3000K	0.24	0.12	0.10	0.32	0.16	0.14	0.40	0.20	0.17	0.49	0.24	0.21	0.58	0.29	0.25
	3500K	0.23	0.12	0.10	0.32	0.16	0.14	0.40	0.20	0.17	0.48	0.24	0.21	0.57	0.29	0.25
	4000K	0.23	0.12	0.10	0.32	0.16	0.14	0.39	0.20	0.17	0.47	0.24	0.21	0.56	0.28	0.24
	5000K	0.23	0.12	0.10	0.32	0.16	0.14	0.40	0.20	0.17	0.49	0.24	0.21	0.58	0.29	0.25
	6500K	0.24	0.12	0.10	0.32	0.16	0.14	0.41	0.20	0.18	0.49	0.25	0.21	0.59	0.30	0.26

PHOTOMETRICS

PNL2X4-98654L-5CCT-PRM (-EM)

Luminaire Data

Description	High Lumen 2X4 Panel Lumen and Kelvin Select
Total Lumens	8,440
Input Wattage	68
Efficacy (lm/W)	123
Spacing Criterion (0-180°)	1.28
Spacing Criterion (90-270°)	1.28

Photometrics calculated @3000k - highest lumen setting

Zonal Lumen Summary

Zone	Lumens	%Fixt
0-20°	1,052	12.5%
0-30°	2,243	26.6%
0-40°	3,692	43.7%
20-50°	4,157	49.3%
40-70°	3,961	46.9%
0-60°	6,592	78.1%
0-80°	8,267	98.0%
0-90°	8,433	99.9%
90-180°	7	0.1%
0-180°	8,440	100.0%

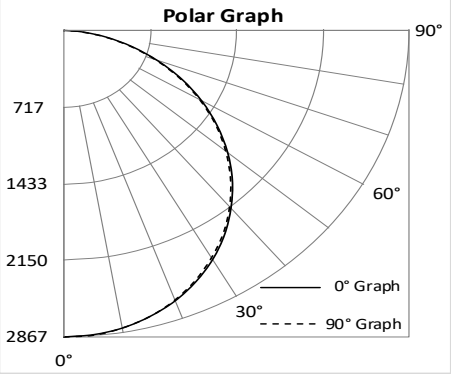

COMPATIBLE DIMMERS AND CONTROLS

Manufacturer	Model Number	Dimmer Range	Load Switching Capacity
Americanlite	DWS-010V-T	10%-100%	600W
Americanlite	DWS-010V-D	10%-100%	600W
Leviton	IP710-LFZ	10%-100%	1200W
Lutron	DVSTV	10%-100%	450W

MOUNTING MEANS - ORDER SEPARATELY

- Optional Surface Mounting Kit (SMKT-24) mounts below the ceilings.
- Optional flange mounting kits provide for recessed installation on plaster or other hard ceilings. Attached Flange Mount Kit (FLANGEKIT24-ET) to ceiling joists or other stationary structures, and the panel is mounted flush to the ceiling.
- Optional cable mounting kits provide additional security, as well as suspended mounting. Attach one end of the Cable Mount Kit (PNL-CM) to luminaire earthquake clips using spring clips, and attach the other end to stationary structures using the adjustable, locking ceiling attachment (see picture below right).

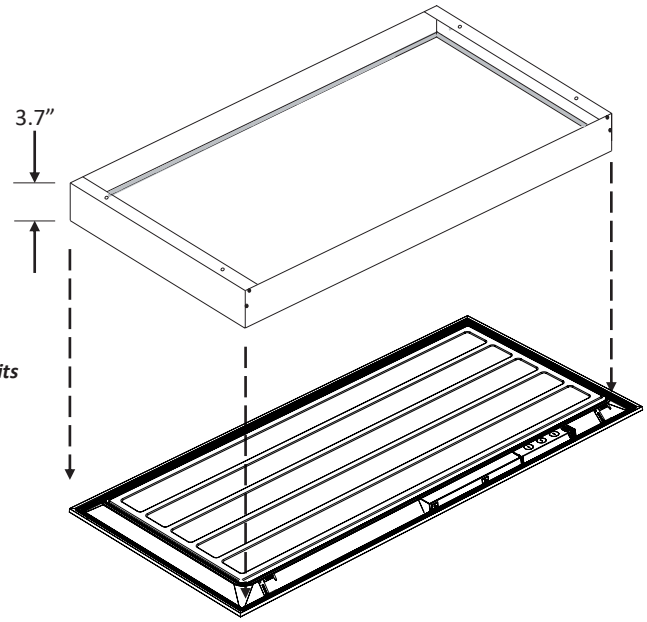

Surface Mounting Kits (SMKT-24)

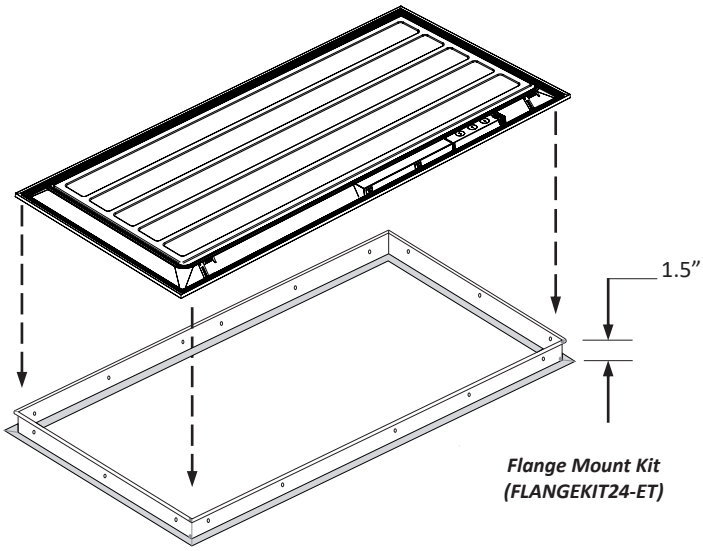

Flange Mount Kit (FLANGEKIT24-ET)

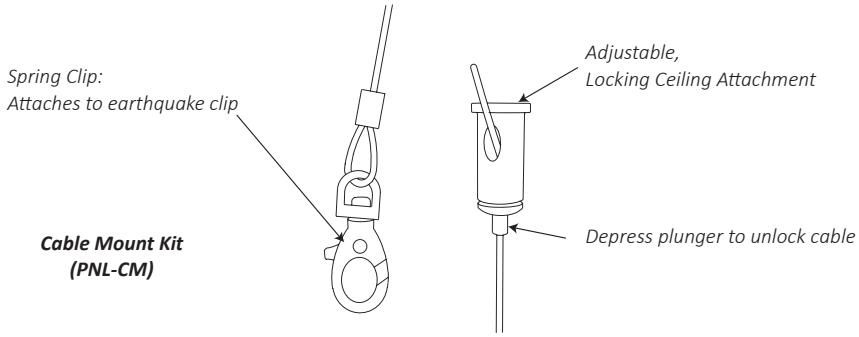

Cable Mount Kit (PNL-CM)

PNL1X4-LKFS

americanlite®

1X4 Back-Lit LED Panel - LKFS

STANDARD

FEATURES

- *Field selectable 3500k (warm/neutral white), 4000k (neutral white), & 5000k (cool white) color temperatures.**
- *Long-life LEDs provide 144,000 hours of operation with at least 70% of initial lumen output (L_{70}), and 44,000 hours with at least 90% of initial lumen output (L_{90}).***
- *Selectable lumen outputs range from 2,600 to 4,000 nominal lumens.**
- *Uniform illumination with no visible LED pixilation.*
- *Universal 120-277 AC voltage (50-60Hz) is standard.*
- *0-10vdc dimming drivers are standard.*
- *Power factor > 90.*
- *Total harmonic distortion < 20%.*
- *Color rendering index > 80.*
- *Aluminum frame and steel housing backplate.*
- *PMMA (polymethyl methacrylate) LED lenses for optimal light distribution, efficiency and longevity.*
- *Easy installation in new construction or retrofit.*
- *Standard earthquake clips provide secure installation in grid ceilings.*
- *Optional emergency drivers (remote mounted) are available.*
- *Standard mounting options include recessed mounting in grid ceilings, or suspended mounting using attached hanging brackets. For mounting in plaster or other hard ceiling, see Mounting Kits.*

** Contact factory for other color temperatures and lumen packages.*
***L_{70} hours are IES TM-21-11 calculated hours.*

WARRANTY & LISTINGS

- *cULus for damp locations and insulated ceilings (Type IC-rated). Suitable for ambient temperatures from -20°C to 40°C (-4°F to 104°F).*
- *DLC approved.*
- *Flicker-free per IEEE1789-2015 (no observable adverse effects of flicker at 100% light output level).*
- *Complies with FCC Part 15, class B.*
- *Surge immunity protection = 1kV.*
- *5-year warranty of all electronics and housing.*

MOUNTING KITS

- *Optional Surface Mount Kits (SMKT-14) and Flange Mounting Kits (FLANGEKIT14-ET) provide for installation on plaster or other hard ceilings.*
- *Optional Cable Mounting Kits (PNL-CMK) provide additional security, as well as suspended mounting.*

DIMENSIONS

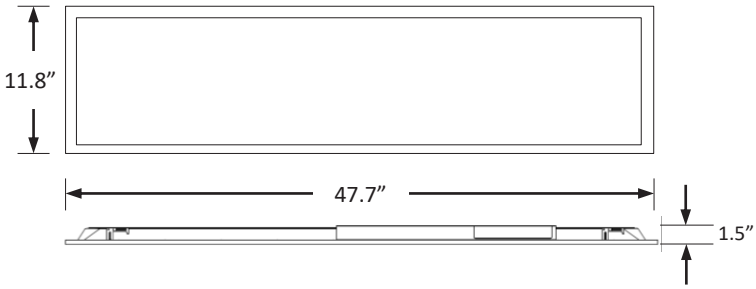

Weight: 6 lbs.

ORDERING INFORMATION

Example: PNL1X4-40L-LKFS

Series	Maximum Lumens	Lumen Output/ Color Temperature			Accessories	
PNL1X4	40L	LKFS*	Selectable Lumens	Selectable CCT	DWS-010-T	0-10v dimmer, toggle switch
			2,600 lm	3500K	DWS-010-D	0-10v dimmer, decora switch
			3,400 lm	4000K		
		*Field selectable	4,000 lm	5000K	IP710-DLZ	0-10v dimmer, button switch

ELECTRICAL DATA

Series	Measurements	Low Lumens			Mid Lumens			High Lumens		
		3500K	4000K	5000K	3500K	4000K	5000K	3500K	4000K	5000K
PNL1X4-LKFS	Lumens	2584	2729	2656	3425	3713	3531	4085	4342	4218
	Watts	20	19	20	28	27	28	35	33	34
	Efficacy	127	140	132	122	137	127	117	131	123
	Input Current (A)	120V = 0.17A	120V = 0.16A	120V = 0.17A	120V = 0.23A	120V = 0.23A	120V = 0.23A	120V = 0.29A	120V = 0.28A	120V = 0.28A
		240V = 0.08A	240V = 0.08A	240V = 0.08A	240V = 0.12A	240V = 0.11A	240V = 0.12A	240V = 0.15A	240V = 0.14A	240V = 0.14A
		277V = 0.07A	277V = 0.07A	277V = 0.07A	277V = 0.10A	277V = 0.10A	277V = 0.10A	277V = 0.13A	277V = 0.12A	277V = 0.12A

PHOTOMETRIC DATA

PNL1X4-40L-LKFS

Luminaire Data

Description	Back Lit Panel 1X4 40L 5K - LKFS
Total Lumens	4,218
Input Wattage	34
Efficacy (lm/W)	123
Spacing Criterion (0-180°)	1.32
Spacing Criterion (90-270°)	1.28

Zonal Lumen Summary

Zone	Lumens	%Fixt
0-20°	506	12.0%
0-30°	1,085	25.7%
0-40°	1,796	42.6%
20-50°	2,044	48.4%
40-70°	1,995	47.3%
0-60°	3,246	77.0%
0-80°	4,117	97.6%
0-90°	4,213	99.9%
90-180°	5	0.1%
0-180°	4,218	100.0%

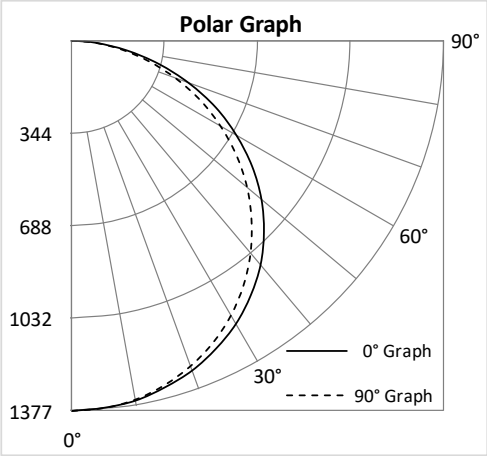

PNL1X4-LKFS

americanlite®

COMPATIBLE EMERGENCY DRIVERS*

Emergency Driver Part Number	EM5		EM10		EM13		Runtime
Model	Watts	EM Lumens	Watts	EM Lumens	Watts	EM Lumens	
PNL1X4-40L-LKFS	5	650	10	1300	13	1690	90 MINS.

* Remote mount only.
* Suitable for ambient temperatures above 0°C (32°F).

COMPATIBLE DIMMERS & CONTROLS

Manufacture	Model Number	Dimming Range	Load Switching Capacity
Americanlite	DWS-010V-T	10%-100%	600W
Americanlite	DWS-010V-D	10%-100%	600W
Leviton	IP710-LFZ	10%-100%	1200W
Lutron	DVSTV	10%-100%	450W

MOUNTING MEANS – ORDER SEPARATELY

- *Optional surface mounting kits (SMKT-14) mounts below the ceiling.*
- *Optional flange mounting kits provide for recessed installation on plaster or other hard ceilings. Attach Flange Mount Kit (FLANGEKIT14-ET) to ceiling joists or other stationary structures, and the panel is mounted flush to the ceiling.*
- *Optional cable mounting kits provide additional security, as well as suspended mounting. Attach one end of the Cable Mount Kit (PNL-CMK) to luminaire earthquake clips using spring clips, and attach the other end to stationary structures using the adjustable, locking ceiling attachment (see picture below right).*

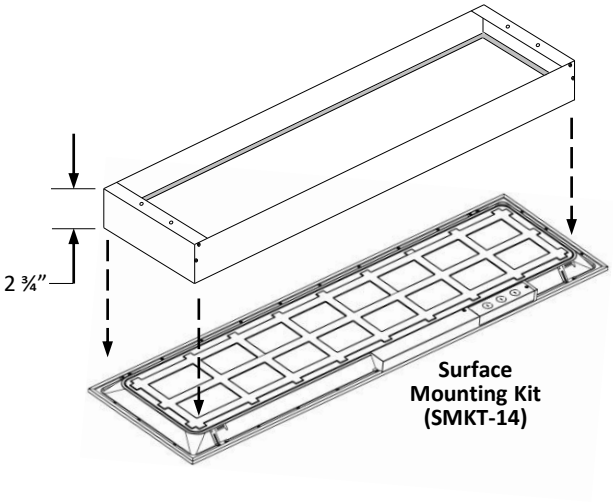

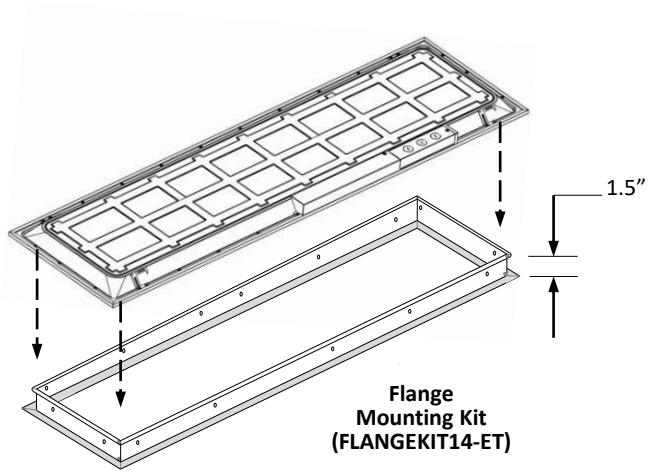

Cable Mounting Kit (PNL-CMK)

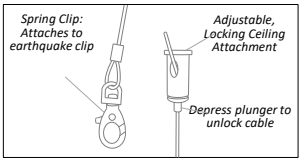

Cable Mount Kit:
- *Spring Clip*
- *Adjustable, locking ceiling attachment*

PNL2X2-LKFS

americanlite®

2X2 Back-Lit LED Panel - LKFS

STANDARD

FEATURES

- *Field selectable 3500k (warm/neutral white), 4000k (neutral white), & 5000k (cool white) color temperatures.**
- *Long-life LEDs provide 144,000 hours of operation with at least 70% of initial lumen output (L_{70}), and 44,000 hours with at least 90% of initial lumen output (L_{90}).***
- *Selectable lumen outputs range from 2,700 to 4,000 nominal lumens.**
- *Uniform illumination with no visible LED pixilation.*
- *Universal 120-277 AC voltage (50-60Hz) is standard.*
- *0-10vdc dimming drivers are standard.*
- *Power factor > 90.*
- *Total harmonic distortion < 20%.*
- *Color rendering index > 80.*
- *Aluminum frame and steel housing backplate.*
- *PMMA (polymethyl methacrylate) LED lenses for optimal light distribution, efficiency and longevity.*
- *Easy installation in new construction or retrofit.*
- *Standard earthquake clips provide secure installation in grid ceilings.*
- *Optional emergency drivers are available.*
- *Standard mounting options include recessed mounting in grid ceilings, or suspended mounting using attached hanging brackets. For mounting in plaster or other hard ceiling, see Mounting Kits.*

** Contact factory for other color temperatures and lumen packages.*
***L_{70} hours are IES TM-21-11 calculated hours.*

WARRANTY & LISTINGS

- *cULus for damp locations and insulated ceilings (Type IC-rated). Suitable for ambient temperatures from -20°C to 40°C (-4°F to 104°F).*
- *DLC premium approved.*
- *Flicker-free per IEEE1789-2015 (no observable adverse effects of flicker at 100% light output level).*
- *Complies with FCC Part 15, class B.*
- *Surge immunity protection = 1kV.*
- *5-year warranty of all electronics and housing.*

MOUNTING KITS

- *Optional Surface Mount Kits (SMKT-22) and Flange Mounting Kits (FLANGEKIT22-ET) provide for installation on plaster or other hard ceilings.*
- *Optional Cable Mounting Kits (PNL-CMK) provide additional security, as well as suspended mounting.*

DIMENSIONS

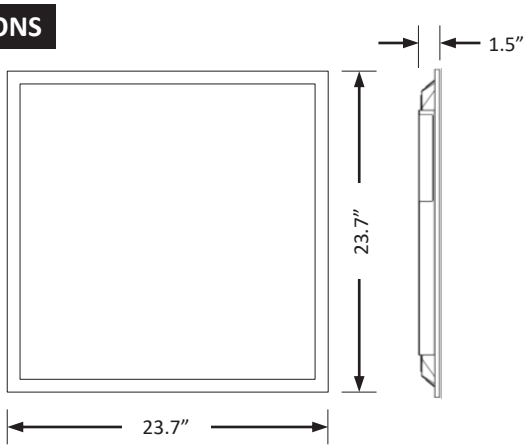

Weight: 4 lbs.

ORDERING INFORMATION

Example: PNL2X2-40L-LKFS-PRM

Series	Maximum Lumens	Lumen Output/ Color Temperature			DLC		Emergency Driver [1]		Accessories	
PNL2X2	40L	LKFS*	Selectable Lumens	Selectable CCT	PRM	PREMIUM	EM5	650 lumens	DWS-010-T	0-10v dimmer, toggle switch
			2,700 lm	3500K			EM10	1,300 lumens		
			3,600 lm	4000K			EM13	1,690 lumens	DWS-010-D	0-10v dimmer, decora switch
		*Field selectable	4,000 lm	5000K			Blank	No emergency driver	IP710-DLZ	0-10v dimmer, button switch

[1] See list of emergency drivers (page 3).

ELECTRICAL DATA

Series	Measurements	Low Lumens			Mid Lumens			High Lumens		
		3500K	4000K	5000K	3500K	4000K	5000K	3500K	4000K	5000K
PNL2X2-LKFS	Lumens	2733	2802	2810	3632	3810	3743	4072	4290	4179
	Watts	20	19	20	28	27	28	32	32	32
	Efficacy	136	145	141	131	142	136	126	135	130
	Input Current (A)	120V = 0.17A	120V = 0.16A	120V = 0.17A	120V = 0.23A	120V = 0.23A	120V = 0.23A	120V = 0.27A	120V = 0.27A	120V = 0.27A
		240V = 0.08A	240V = 0.08A	240V = 0.08A	240V = 0.12A	240V = 0.11A	240V = 0.12A	240V = 0.13A	240V = 0.13A	240V = 0.13A
		277V = 0.07A	277V = 0.07A	277V = 0.07A	277V = 0.10A	277V = 0.10A	277V = 0.10A	277V = 0.12A	277V = 0.12A	277V = 0.12A

PHOTOMETRIC DATA

PNL2X2-40L-LKFS-PRM

Luminaire Data

Description	Premium Back Lit Panel 2X2 40L 5K - LKFS
Total Lumens	4,179
Input Wattage	32
Efficacy (lm/W)	130
Spacing Criterion (0-180°)	1.3
Spacing Criterion (90-270°)	1.28

Zonal Lumen Summary

Zone	Lumens	%Fixt
0-20°	514	12.3%
0-30°	1,098	26.3%
0-40°	1,810	43.3%
20-50°	2,043	48.9%
40-70°	1,962	46.9%
0-60°	3,240	77.5%
0-80°	4,087	97.8%
0-90°	4,175	99.9%
90-180°	4	0.1%
0-180°	4,179	100.0%

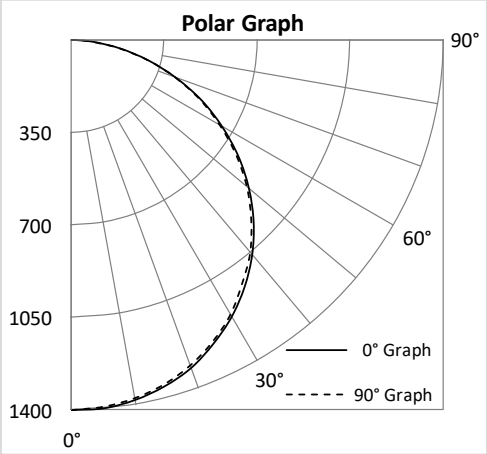

COMPATIBLE EMERGENCY DRIVERS*

Emergency Driver Part Number	EM5		EM10		EM13		Runtime
Model	Watts	EM Lumens	Watts	EM Lumens	Watts	EM Lumens	
PNL2X2-40L-LKFS-PRM	5	650	10	1300	13	1690	90 MINS.

* Suitable for ambient temperatures above 0°C (32°F).

COMPATIBLE DIMMERS & CONTROLS

Manufacturer	Model Number	Dimming Range	Load Switching Capacity
Americanlite	DWS-010V-T	10%-100%	600W
Americanlite	DWS-010V-D	10%-100%	600W
Leviton	IP710-LFZ	10%-100%	1200W
Lutron	DVSTV	10%-100%	450W

MOUNTING MEANS – ORDER SEPARATELY

- *Optional surface mounting kits (SMKT-22) mounts below the ceiling.*
- *Optional flange mounting kits provide for recessed installation on plaster or other hard ceilings. Attach Flange Mount Kit (FLANGEKIT22-ET) to ceiling joists or other stationary structures, and the panel is mounted flush to the ceiling.*
- *Optional cable mounting kits provide additional security, as well as suspended mounting. Attach one end of the Cable Mount Kit (PNL-CMK) to luminaire earthquake clips using spring clips, and attach the other end to stationary structures using the adjustable, locking ceiling attachment (see picture below right).*

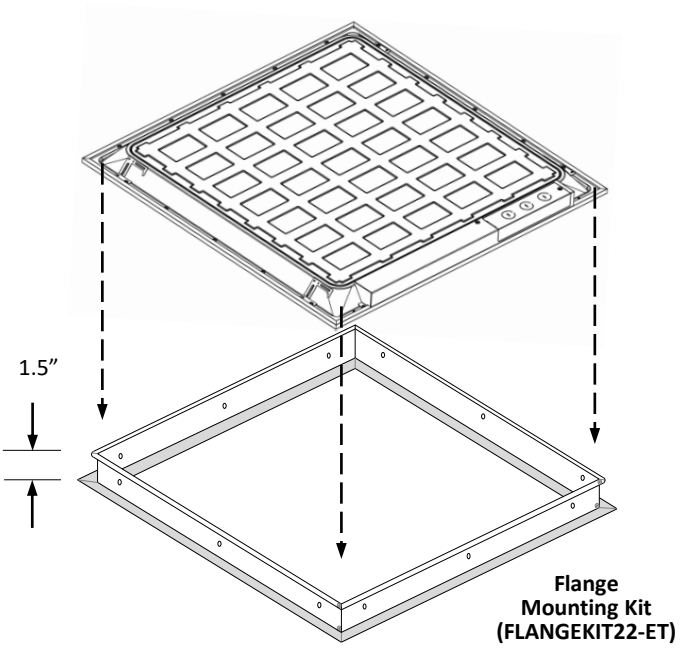

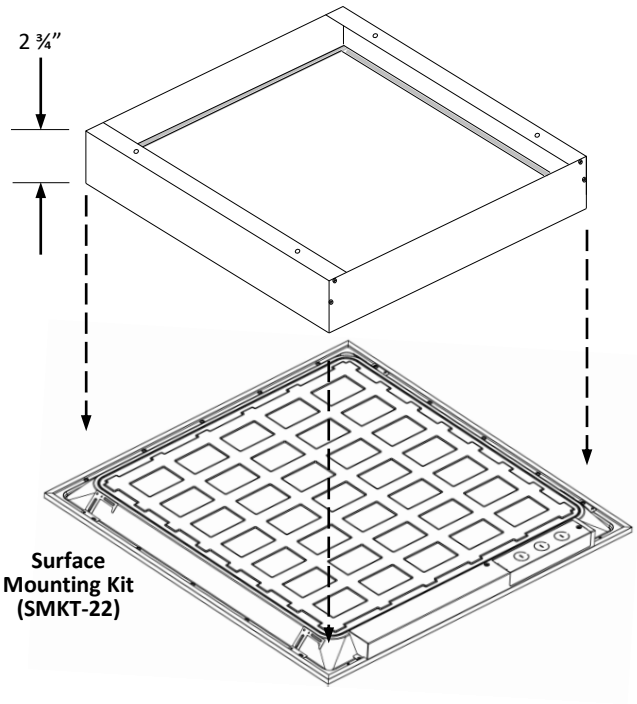

Cable Mounting Kit (PNL-CMK)

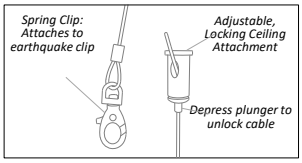

Cable Mount Kit:
- *Spring Clip*
- *Adjustable, locking ceiling attachment*

PNL2X4-LKFS

americanlite

2X4 Back-Lit LED Panel - LKFS

STANDARD

FEATURES

- *Field selectable 3500k (warm/neutral white), 4000k (neutral white), & 5000k (cool white) color temperatures.**
- *Long-life LEDs provide 144,000 hours of operation with at least 70% of initial lumen output (L_{70}), and 44,000 hours with at least 90% of initial lumen output (L_{90}).***
- *Selectable lumen outputs range from 3,300 to 5,000 nominal lumens.**
- *Uniform illumination with no visible LED pixilation.*
- *Universal 120-277 AC voltage (50-60Hz) is standard.*
- *0-10vdc dimming drivers are standard.*
- *Power factor > 90.*
- *Total harmonic distortion < 20%.*
- *Color rendering index > 80.*
- *Aluminum frame and steel housing backplate.*
- *PMMA (polymethyl methacrylate) LED lenses for optimal light distribution, efficiency and longevity.*
- *Easy installation in new construction or retrofit.*
- *Standard earthquake clips provide secure installation in grid ceilings.*
- *Optional emergency drivers are available.*
- *Standard mounting options include recessed mounting in grid ceilings, or suspended mounting using attached hanging brackets. For mounting in plaster or other hard ceiling, see Mounting Kits.*

** Contact factory for other color temperatures and lumen packages.*
***L_{70} hours are IES TM-21-11 calculated hours.*

WARRANTY & LISTINGS

- *cULus for damp locations and insulated ceilings (Type IC-rated). Suitable for ambient temperatures from -20°C to 40°C (-4°F to 104°F).*
- *DLC premium approved.*
- *Flicker-free per IEEE1789-2015 (no observable adverse effects of flicker at 100% light output level).*
- *Complies with FCC Part 15, class B.*
- *Surge immunity protection = 1kV.*
- *5-year warranty of all electronics and housing.*

MOUNTING KITS

- *Optional Surface Mount Kits (SMKT-24) and Flange Mounting Kits (FLANGEKIT24-ET) provide for installation on plaster or other hard ceilings.*
- *Optional Cable Mounting Kits (PNL-CMK) provide additional security, as well as suspended mounting.*

DIMENSIONS

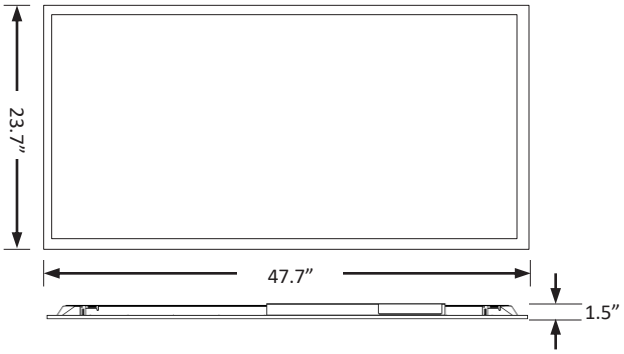

Weight: 9 lbs.

ORDERING INFORMATION

Example: PNL2X4-50L-LKFS-PRM

Series	Maximum Lumens	Lumen Output/ Color Temperature			DLC		Emergency Driver [1]	
PNL2X4	50L	LKFS*	Selectable Lumens	Selectable CCT	PRM	PREMIUM	EM5	650 lumens
			3,300 lm	3500K			EM10	1,300 lumens
			4,500 lm	4000K			EM13	1,690 lumens
		*Field selectable	5,000 lm	5000K			Blank	No emergency driver

[1] See list of emergency drivers (page 3).

ELECTRICAL DATA

Series	Measurements	Low Lumens			Mid Lumens			High Lumens		
		3500K	4000K	5000K	3500K	4000K	5000K	3500K	4000K	5000K
PNL2X4-LKFS	Lumens	3284	3323	3389	4448	4576	4538	5015	5247	5157
	Watts	24	23	24	33	32	33	38	37	38
	Efficacy	138	148	144	134	144	138	131	141	137
	Input Current (A)	120V = 0.20A	120V = 0.19A	120V = 0.20A	120V = 0.28A	120V = 0.27A	120V = 0.28A	120V = 0.32A	120V = 0.31A	120V = 0.32A
		240V = 0.10A	240V = 0.10A	240V = 0.10A	240V = 0.14A	240V = 0.13A	240V = 0.14A	240V = 0.16A	240V = 0.15A	240V = 0.16A
		277V = 0.09A	277V = 0.08A	277V = 0.09A	277V = 0.12A	277V = 0.12A	277V = 0.12A	277V = 0.14A	277V = 0.13A	277V = 0.14A

PHOTOMETRIC DATA

PNL2X4-50L-LKFS-PRM

Luminaire Data

Description	Premium Back Lit Panel 2X4 50L 5K - LKFS
Total Lumens	5,157
Input Wattage	38
Efficacy (lm/W)	137
Spacing Criterion (0-180°)	1.34
Spacing Criterion (90-270°)	1.28

Zonal Lumen Summary

Zone	Lumens	%Fixt
0-20°	614	11.9%
0-30°	1,316	25.5%
0-40°	2,181	42.3%
20-50°	2,491	48.3%
40-70°	2,457	47.6%
0-60°	3,964	76.9%
0-80°	5,039	97.7%
0-90°	5,152	99.9%
90-180°	5	0.1%
0-180°	5,157	100.0%

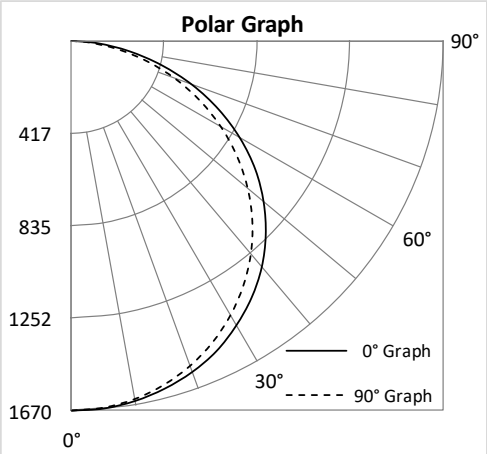

COMPATIBLE EMERGENCY DRIVERS*

Emergency Driver Part Number	EM5		EM10		EM13		Runtime
Model	Watts	EM Lumens	Watts	EM Lumens	Watts	EM Lumens	
PNL2X4-50L-LKFS-PRM	5	650	10	1300	13	1690	90 MINS.

* Remote mount only.
* Suitable for ambient temperatures above 0°C (32°F).

Compatible Dimmers

Manufacture	Model Number	Dimming Range	Load Switching Capacity
Americanlite	DWS-010V-T	10%-100%	600W
Americanlite	DWS-010V-D	10%-100%	600W
Lutron	DVSTV	10%-100%	450W
Leviton	IP710-LFZ	10%-100%	1200W

MOUNTING MEANS – ORDER SEPARATELY

- *Optional surface mounting kits (SMKT-24) mounts below the ceiling.*
- *Optional flange mounting kits provide for recessed installation on plaster or other hard ceilings. Attach Flange Mount Kit (FLANGEKIT24-ET) to ceiling joists or other stationary structures, and the panel is mounted flush to the ceiling.*
- *Optional cable mounting kits provide additional security, as well as suspended mounting. Attach one end of the Cable Mount Kit (PNL-CMK) to luminaire earthquake clips using spring clips, and attach the other end to stationary structures using the adjustable, locking ceiling attachment (see picture below right).*

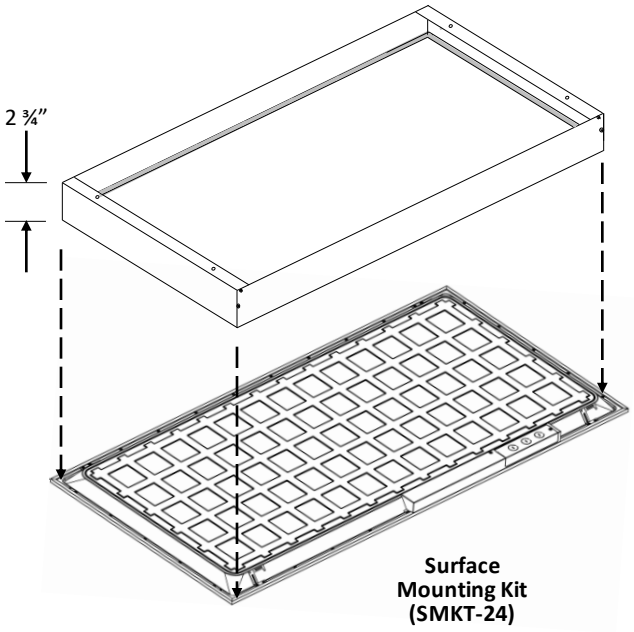

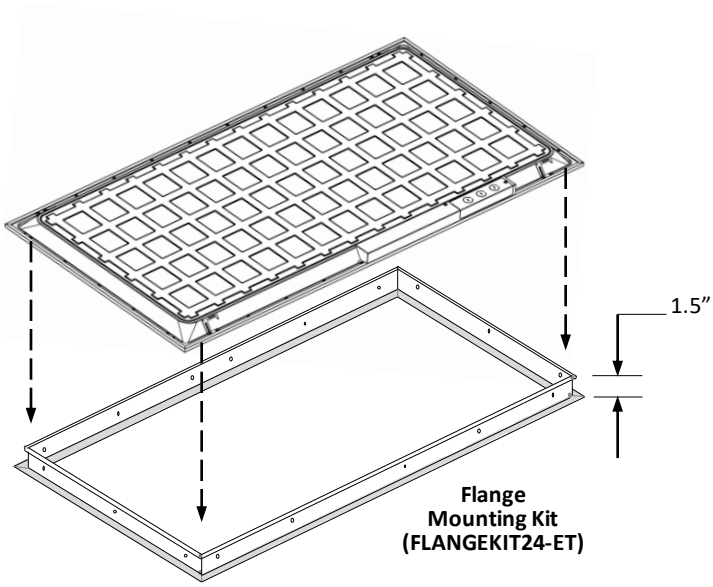

Cable Mounting Kit (PNL-CMK)

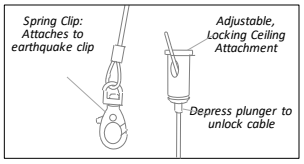

Cable Mount Kit:
- *Spring Clip*
- *Adjustable, locking ceiling attachment*

Full Body Linear High Bay Sensor Ready Lumens & Kelvin Selectable

STANDARDS

c UL us LISTED | DLC LISTED PREMIUM | FC | DAMP | 6kV Surge Protection

HOUSING

- Premium powder-coat, die cast aluminum, white housing.

ELECTRICAL

- Operating temperature (ambient):
  -40°C to 55°C (-40°F to 131°F) for FHBSR-181512L and FHBSR241815L.
  -40°C to 50°C (-40°F to 122°F) for FHBSR-363024L and FHBSR604836L.
- Universal 120-277V AC voltage (50-60Hz) is standard.
- 347-480V achieved with step-down transformer.
- 0-10VDC dimming drivers are standard.
- Emergency driver option available.
- Input transient surge protection = 6kV.
- PF > 0.9 ; THD < 20%.

OPTICAL SYSTEM

- Polycarbonate prismatic lens.
- Field selectable 4000k (neutral white) and 5000k (cool white) color temperatures*.
- Tri-lumen selectable delivers 12,000 to 60,000 nominal lumens (see lumen tables on page 3)**.
- Screw in sensor ready. Sensor and remote control sold separately.
- Remote control required to change factory sensor settings (see default settings on page 2).
- Long-life LEDs provide 135,000 hours of operation with at least 70% of initial lumen output (L70), and 41,000 hours with at least 90% of initial lumen output (L90)***.
- LED color maintenance < 0.003 chromaticity shift (Δu'v') over the initial 6,000 hours of operation.
- Color rendering index > 80%

* Default kelvin temperature = 4000k.
** Default power setting = highest lumen output.
***L70 & L90 hours are IES TM-21-11 calculated hours.

MOUNTING

- Chain-mount kits (includes v-hooks , 1-meter long chain) are standard.
- Optional surface mounting kit provides attachment to solid surfaces*.
- Optional pendant mounting kit provides pendant attachment to 1/2" rigid conduit*.
- Optional cable mount kit provides luminaire suspension.

* Surface mount kit and Pendant mount kit are not compatible with the UNC StepDown Transformer option, nor the on-board, factory installed EM driver options.

CODE COMPLIANCE

- cULus listed for damp locations.
- DLC premium listed.
- Complies with FCC part 15, class A.

WARRANTY

- 5 year warranty on all electronics and housing.

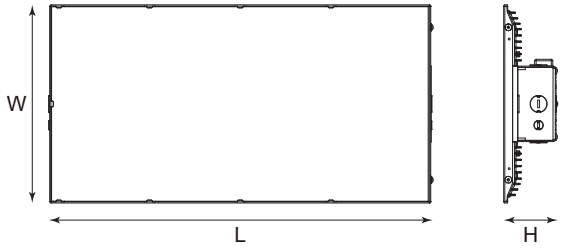

Model #	L (in)	W (in)	H (in)	Weight (lbs)
FHBSR-181512L-4K5K	13.00	9.50	2.20	3.7
FHBSR-241815L-4K5K	14.20	10.25	2.40	4.5
FHBSR-363024L-4K5K	19.70	10.25	2.60	6.5
FHBSR-604836L-4K5K	30.70	11.00	2.60	9.25

ORDERING INFORMATION

Example: FHBSR-181512L-4K5K-EM25

Series	Nominal Lumen Output (Selectable)		Kelvin Selectable	Input Voltage	Emergency Driver
FHBSR	181512L	18,000 / 15,000 / 12,000	4K5K	UNC* 347-480V Blank 120-277V	EM10 10W emergency driver EM13 13W emergency driver EM25 25W emergency driver Blank No emergency driver
	241815L	24,000 / 18,000 / 15,000			
	363024L	36,000 / 30,000 / 24,000			
	604836L	60,000 / 48,000 / 36,000			

* UNC option no compatible with EM

ACCESSORIES (ORDER SEPARATELY)

Sensor:

HD07VR-PH-1-90	=	Passive infrared sensor with 90° elbow adapter- maximum mounting height = 39FT, factory settings: detection area =100%, hold time = 5 sec, stand-by period = 0 sec, stand-by dimming level = 10%, daylight threshold = disabled
HD07VR-MH-B-1-90	=	Microwave step-dimming sensor with 90° elbow adapter - maximum mounting height = 49FT, factory settings: detection area =100%, hold time = 5 sec, stand-by period = 0 sec, stand-by dimming level = 10%, daylight threshold = disabled
HD05R	=	Remote control for HD07VR-PH-1-90 & HD07VR-MH-B-1-90 (required to change factory settings)

Wire Guard:

FHBSR-WG-181512L	=	WIRE GUARD FOR FHBSR-WG-181512L
FHBSR-WG-241815L	=	WIRE GUARD FOR FHBSR-WG-241815L
FHBSR-WG-363024L	=	WIRE GUARD FOR FHBSR-WG-363024L
FHBSR-WG-604836L	=	WIRE GUARD FOR FHBSR-WG-604836L

Mounting O tion

FHBSR-SMK	=	SURFACE MOUNT KIT FOR FHBSR- ALL MODELS*
FHBSR-PMK	=	PENDANT MOUNT KIT FOR FHBSR- ALL MODELS*
CMK-3	=	CABLE MOUNT KIT 3 METER- ALL MODELS
CMK-5	=	CABLE MOUNT KIT 5 METER- ALL MODELS

* SMK and PMK not compatible with UNC and EM drivers.

Remote Mount EM Drivers:

BLEM-CP-10C	=	EMERGENCY DRIVER - EM10
BLEM-CP-13C	=	EMERGENCY DRIVER - EM13

LUMEN TABLES

Series	Measurements	Low Lumens		Mid Lumens		High Lumens	
		4000k	5000k	4000k	5000k	4000k	5000k
FHBSR-181512L-4K5K	Lumens	12,454	12,245	15,387	14,987	18,260	17,662
	Watt	81.57	82.68	103.79	105.72	127.33	130.36
	Efficacy	153	148	148	142	143	135

Series	Measurements	Low Lumens		Mid Lumens		High Lumens	
		4000k	5000k	4000k	5000k	4000k	5000k
FHBSR-241815L-4K5K	Lumens	15,480	15,446	18,164	17,944	23,772	23,381
	Watt	97.50	98.69	116.37	117.96	158.16	161.41
	Efficacy	159	157	156	152	150	145

Series	Measurements	Low Lumens		Mid Lumens		High Lumens	
		4000k	5000k	4000k	5000k	4000k	5000k
FHBSR-363024L-4K5K	Lumens	24,204	24,004	29,825	29,339	35,415	34,727
	Watt	151.23	154.24	192.09	196.72	235.36	242.20
	Efficacy	160	156	155	149	150	143

Series	Measurements	Low Lumens		Mid Lumens		High Lumens	
		4000k	5000k	4000k	5000k	4000k	5000k
FHBSR-604836L-4K5K	Lumens	36,167	36,380	47,698	47,582	59,177	58,715
	Watt	224.7	228.0	305.1	309.5	389.6	397.7
	Efficacy	161	160	156	154	152	148

ELECTRICAL DATA

Series	CCT	Input Amps (A)								
		Low Lumens			Mid Lumens			High Lumens		
		120V	240V	277V	120V	240V	277V	120V	240V	277V
FHBSR-181512L-4K5K	4000k	0.68	0.34	0.29	0.86	0.43	0.37	1.06	0.53	0.46
	5000k	0.69	0.34	0.30	0.88	0.44	0.38	1.09	0.54	0.47

Series	CCT	Input Amps (A)								
		Low Lumens			Mid Lumens			High Lumens		
		120V	240V	277V	120V	240V	277V	120V	240V	277V
FHBSR-241815L-4K5K	4000k	0.81	0.41	0.35	0.97	0.48	0.42	1.32	0.66	0.57
	5000k	0.82	0.41	0.36	0.98	0.49	0.43	1.35	0.67	0.58

Series	CCT	Input Amps (A)								
		Low Lumens			Mid Lumens			High Lumens		
		120V	240V	277V	120V	240V	277V	120V	240V	277V
FHBSR-363024L-4K5K	4000k	1.26	0.63	0.55	1.60	0.80	0.69	1.96	0.98	0.85
	5000k	1.29	0.64	0.56	1.64	0.82	0.71	2.02	1.01	0.87

Series	CCT	Input Amps (A)								
		Low Lumens			Mid Lumens			High Lumens		
		120V	240V	277V	120V	240V	277V	120V	240V	277V
FHBSR-604836L-4K5K	4000k	1.87	0.94	0.81	2.54	1.27	1.10	3.25	1.62	1.41
	5000k	1.90	0.95	0.82	2.58	1.29	1.12	3.31	1.66	1.44

PHOTOMETRICS

FHBSR-181512L-4K5K

Luminaire Data

Description	Full Body High Bay Lumen/Kelvin Selectable
Total Lumens	17,662
Input Wattage	130
Efficacy (lm/W)	135
Spacing Criterion (0-180°)	1.26
Spacing Criterion (90-270°)	1.24

Photometrics calculated at 5000k-high lumens setting

Zonal Lumen Summary

Zone	Lumens	%Fixt
0-20°	3,042	17.2%
0-30°	6,475	36.7%
0-40°	10,520	59.6%
20-50°	10,813	61.2%
40-70°	6,271	35.5%
0-60°	15,726	89.0%
0-80°	17,425	98.7%
0-90°	17,638	99.9%
90-180°	24	0.1%
0-180°	17,662	100.0%

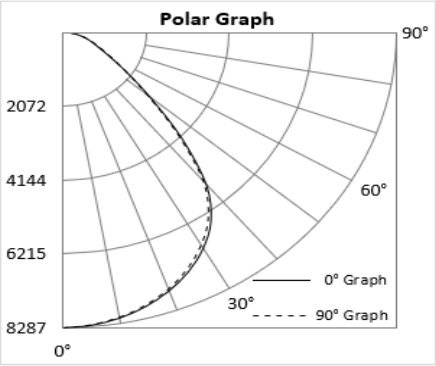

FHBSR-241815L-4K5K

Luminaire Data

Description	Full Body High Bay Lumen/Kelvin Selectable
Total Lumens	23,381
Input Wattage	161
Efficacy (lm/W)	145
Spacing Criterion (0-180°)	1.26
Spacing Criterion (90-270°)	1.28

Photometrics calculated at 5000k-high lumens setting

Zonal Lumen Summary

Zone	Lumens	%Fixt
0-20°	4,016	17.2%
0-30°	8,550	36.6%
0-40°	13,901	59.5%
20-50°	14,322	61.3%
40-70°	8,341	35.7%
0-60°	20,833	89.1%
0-80°	23,074	98.7%
0-90°	23,350	99.9%
90-180°	31	0.1%
0-180°	23,381	100.0%

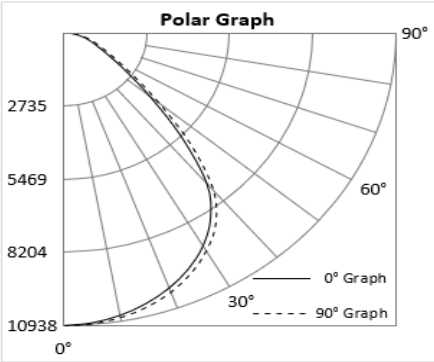

FHBSR-363024L-4K5K

Luminaire Data

Description	Full Body High Bay Lumen/Kelvin Selectable
Total Lumens	34,727
Input Wattage	242
Efficacy (lm/W)	143
Spacing Criterion (0-180°)	1.26
Spacing Criterion (90-270°)	1.28

Photometrics calculated at 5000k-high lumens setting

Zonal Lumen Summary

Zone	Lumens	%Fixt
0-20°	5,902	17.0%
0-30°	12,592	36.3%
0-40°	20,536	59.1%
20-50°	21,267	61.2%
40-70°	12,472	35.9%
0-60°	30,906	89.0%
0-80°	34,256	98.6%
0-90°	34,682	99.9%
90-180°	45	0.1%
0-180°	34,727	100.0%

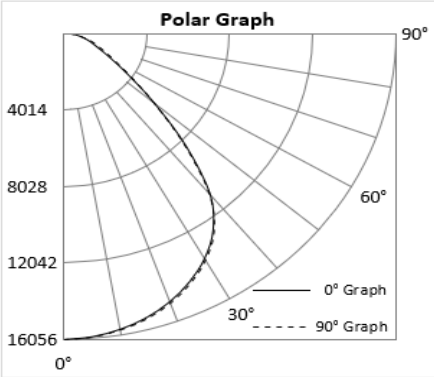

FHBSR-604836L-4K5K

Luminaire Data

Description	Full Body High Bay Lumen/Kelvin Selectable
Total Lumens	58,715
Input Wattage	398
Efficacy (lm/W)	148
Spacing Criterion (0-180°)	1.28
Spacing Criterion (90-270°)	1.26

Photometrics calculated at 5000k-high lumens setting

Zonal Lumen Summary

Zone	Lumens	%Fixt
0-20°	9,998	17.0%
0-30°	21,317	36.3%
0-40°	34,727	59.1%
20-50°	35,995	61.3%
40-70°	21,199	36.1%
0-60°	52,364	89.2%
0-80°	58,000	98.8%
0-90°	58,644	99.9%
90-180°	71	0.1%
0-180°	58,715	100.0%

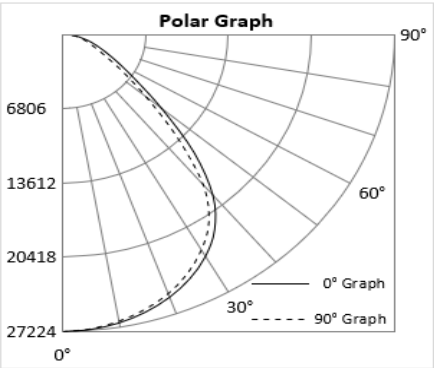

COMPATIBLE EMERGENCY DRIVERS-INSTALLED

Emergency Driver Part Number	EM10		EM13		EM25	
Model	Watts	EM Lumens	Watts	EM Lumens	Watts	EM Lumens
FHBSR-181512L-4K5K	10	1400	13	1820	25	3500
FHBSR-241815L-4K5K	10	1500	13	1950	25	3750
FHBSR-363024L-4K5K	10	1400	13	1820	25	3500
FHBSR-604836L-4K5K	10	1500	13	1950	25	3750

COMPATIBLE DIMMERS AND CONTROLS

Model Number	Dimmer Range	Load Switching Capacity
DWS-010V-T	10%-100%	600W
DWS-010V-D	10%-100%	600W
IP710-LFZ	10%-100%	1200W
DVSTV	10%-100%	450W

PLUGS AND CORDS

Part number suffix	Description	For use with
6C3	6' cord - 3 conductor (black/white/green)	Standard & UNC
6C4	6' cord - 4 conductor (black/white/green/red)	EM driver
6C5	6' cord - 5 conductor (black/white/green/purple/pink)	Dimming (standard & UNC)
6C6	6' cord - 6 conductor (black/white/green/red/purple/pink)	Dimming & EM driver
10C3	10' cord - 3 conductor (black/white/green)	Standard & UNC
10C4	10' cord - 4 conductor (black/white/green/red)	EM driver
10C5	10' cord - 5 conductor (black/white/green/purple/pink)	Dimming (standard & UNC)
10C6	10' cord - 6 conductor (black/white/green/red/purple/pink)	Dimming & EM driver
15C3	15' cord - 3 conductor (black/white/green)	Standard & UNC
15C4	15' cord - 4 conductor (black/white/green/red)	EM driver
15C5	15' cord - 5 conductor (black/white/green/purple/pink)	Dimming (standard & UNC)
15C6	15' cord - 6 conductor (black/white/green/red/purple/pink)	Dimming & EM driver
6W3	6' whip - 3 conductor (black/white/green)	Standard & UNC
6W4	6' whip - 4 conductor (black/white/green/red)	EM driver
6W5	6' whip - 5 conductor (black/white/green/purple/pink)	Dimming (standard & UNC)
6W6	6' whip - 6 conductor (black/white/green/red/purple/pink)	Dimming & EM driver

PLUGS AND CORDS

Part number suffix	Description	For use with
6P515	6' cord - 3 conductor (black/white/green) - NEMA 5-15 plug (120V/15A)	Standard luminaire
6P615	6' cord - 3 conductor (black/white/green) - NEMA 6-15 plug (240V/15A)	Standard luminaire
6P715	6' cord - 3 conductor (black/white/green) - NEMA 7-15 plug (277V/15A)	Standard luminaire
6P520	6' cord - 3 conductor (black/white/green) - NEMA 5-20 plug (120V/20A)	Standard luminaire
6P620	6' cord - 3 conductor (black/white/green) - NEMA 6-20 plug (277V/20A)	Standard luminaire
6P515L	6' cord - 3 conductor (black/white/green) - NEMA L5-15 plug (120V/15A locking)	Standard luminaire
6P615L	6' cord - 3 conductor (black/white/green) - NEMA L6-15 plug (240V/15A locking)	Standard luminaire
6P715L	6' cord - 3 conductor (black/white/green) - NEMA L7-15 plug (277V/15A locking)	Standard luminaire
6P520L	6' cord - 3 conductor (black/white/green) - NEMA L5-20 plug (120V/20A locking)	Standard luminaire
6P620L	6' cord - 3 conductor (black/white/green) - NEMA L6-20 plug (240V/20A locking)	Standard luminaire
6P720L	6' cord - 3 conductor (black/white/green) - NEMA L7-20 plug (277V/20A locking)	Standard luminaire
6P2420L	6' cord - 3 conductor (black/white/green) - NEMA L24-20 plug (347V/20A locking)	UNC luminaire
6P820L	6' cord - 3 conductor (black/white/green) - NEMA L8-20 plug (480V/20A locking)	UNC luminaire
10P515	10' cord - 3 conductor (black/white/green) - NEMA 5-15 plug (120V/15A)	Standard luminaire
10P615	10' cord - 3 conductor (black/white/green) - NEMA 6-15 plug (240V/15A)	Standard luminaire
10P715	10' cord - 3 conductor (black/white/green) - NEMA 7-15 plug (277V/15A)	Standard luminaire
10P520	10' cord - 3 conductor (black/white/green) - NEMA 5-20 plug (120V/20A)	Standard luminaire
10P620	10' cord - 3 conductor (black/white/green) - NEMA 6-20 plug (277V/20A)	Standard luminaire
10P515L	10' cord - 3 conductor (black/white/green) - NEMA L5-15 plug (120V/15A locking)	Standard luminaire
10P615L	10' cord - 3 conductor (black/white/green) - NEMA L6-15 plug (240V/15A locking)	Standard luminaire
10P715L	10' cord - 3 conductor (black/white/green) - NEMA L7-15 plug (277V/15A locking)	Standard luminaire
10P520L	10' cord - 3 conductor (black/white/green) - NEMA L5-20 plug (120V/20A locking)	Standard luminaire
10P620L	10' cord - 3 conductor (black/white/green) - NEMA L6-20 plug (240V/20A locking)	Standard luminaire
10P720L	10' cord - 3 conductor (black/white/green) - NEMA L7-20 plug (277V/20A locking)	Standard luminaire
10P2420L	10' cord - 3 conductor (black/white/green) - NEMA L24-20 plug (347V/20A locking)	UNC luminaire
10P820L	10' cord - 3 conductor (black/white/green) - NEMA L8-20 plug (480V/20A locking)	UNC luminaire
15P515	15' cord - 3 conductor (black/white/green) - NEMA 5-15 plug (120V/15A)	Standard luminaire
15P615	15' cord - 3 conductor (black/white/green) - NEMA 6-15 plug (240V/15A)	Standard luminaire
15P715	15' cord - 3 conductor (black/white/green) - NEMA 7-15 plug (277V/15A)	Standard luminaire
15P520	15' cord - 3 conductor (black/white/green) - NEMA 5-20 plug (120V/20A)	Standard luminaire
15P620	15' cord - 3 conductor (black/white/green) - NEMA 6-20 plug (277V/20A)	Standard luminaire
15P515L	15' cord - 3 conductor (black/white/green) - NEMA L5-15 plug (120V/15A locking)	Standard luminaire
15P615L	15' cord - 3 conductor (black/white/green) - NEMA L6-15 plug (240V/15A locking)	Standard luminaire
15P715L	15' cord - 3 conductor (black/white/green) - NEMA L7-15 plug (277V/15A locking)	Standard luminaire
15P520L	15' cord - 3 conductor (black/white/green) - NEMA L5-20 plug (120V/20A locking)	Standard luminaire
15P620L	15' cord - 3 conductor (black/white/green) - NEMA L6-20 plug (240V/20A locking)	Standard luminaire
15P720L	15' cord - 3 conductor (black/white/green) - NEMA L7-20 plug (277V/20A locking)	Standard luminaire
15P2420L	15' cord - 3 conductor (black/white/green) - NEMA L24-20 plug (347V/20A locking)	UNC luminaire
15P820L	15' cord - 3 conductor (black/white/green) - NEMA L8-20 plug (480V/20A locking)	UNC luminaire

CB22-4L-LKFS

americanlite.

Center Basket
Lumen & Kelvin Selectable

STANDARDS

HOUSING

- Premium powder-coat,steel, white housing.

ELECTRICAL

- Operating temperature (ambient): -25°C to 50°C (-13°F to 122°F).
- Universal 120-277V AC voltage (50-60Hz) is standard.
- 0-10VDC, continuous dimming capability drivers are standard.
- Emergency driver option available.
- Type IC rated for insulated ceilings.
- Inherently protected.
- Uniform illumination with no visible LED pixilation.
- Input transient surge protection = 2.5kV.
- Power factor > 0.90.
- Total Harmonic distortion < 20%.

OPTICAL SYSTEM

- PMMA (polymethyl methacrylate) frosted lens.
- Field selectable 3500k(warm white), 4000k (neutral white) and 5000k (cool white) color temperatures*.
- Provides a range of 3,600 to 4,700 nominal lumens*.
- Long-life LEDs provide 180,000 hours of operation with at least 70% of initial lumen output (L70), and 54,000 hours with at least 90% of initial lumen output (L90)**.
- Optional Microwave Sensor (factory installed) .
- Remote control required for programming of sensor.
- LED color maintenance < -0.0012 chromaticity shift (Δu'v') over the initial 6,000 hours of operation.
- Color rendering index > 80.

* Default kelvin temperature 4000k and highest lumen output.
**L70 & L90 hours are 50 100 50 50 calculated hours.

MOUNTING*

- Standard recessed mounting in grid ceilings, fits in standard 2'x2' grid ceilings.
- Built-in earthquake clips provide secure installation in grid ceilings.
- Surface mounting and flange mount kits are optional.
- Optional Suspension mounting using cable mount kit and earthquake clips.
- Easy installation in new construction or retrofit.

* See accessories section for mounting accessories.

CODE COMPLIANCE

- cULus listed for damp locations.
- UL listed for maximum of 4. 12AWG through branch circuit conductor.
- DLC standard listed.
- Complies with FCC part 15, class A.

WARRANTY

- 5 year warranty on all electronics and housing.

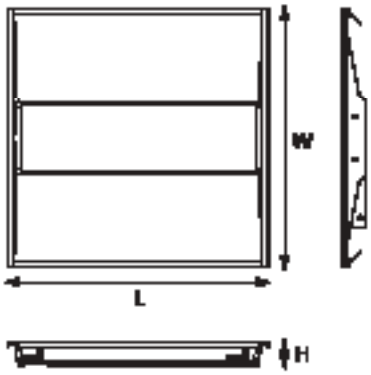

Model #	L (in)	W (in)	H (in)	Weight (lbs)
CB22-4L-LKFS (-OOS)	23.74	23.74	2.13	7.25

ORDERING INFORMATION

Example: CB22-4L-LKFS (-OOS)

Series	Nominal Lumen Output (Selectable)		Kelvin Selectable	Emergency Driver	Factory Installed Sensor
CB22	4L	4,700 / 4,200 / 3,600	LKFS 35K / 4K / 5K	EM5 5W Emergency Driver EM10 10W Emergency Driver EM13 13W Emergency Driver Blank No Emergency Driver	OOS Factory installed Microwave Sensor Blank No Sensor

ACCESSORIES (ORDER SEPARATELY)

Remote Mount Sensors:

YMI2301	=	Ceiling Mount 360° PIR Sensor
YMI210BT	=	Wall Switch With PIR OCC/VAC Sensor
HD05R	=	Remote control required for programming factory installed sensor(sold separately)

Default sensor settings: detection area =100%, hold time = 5 sec, daylight threshold = disabled, stand-by period = 0 sec, stand-by dimming level = 10%

Dimmer:

DWS-010-T	=	0-10V Dimmer, Toggle Switch
DWS-010-D	=	0-10V Dimmer, Decora Switch
IP710-DHZ	=	0-10V Dimmer, Button Switch

Mounting Option:

SMKT-22	=	Compatible Surface Mount Kit For CB22-4L-LKFS.
FLANGEKIT22-ET	=	Compatible Recessed Flange Mount Kit for CB22-4L-LKFS.
PML-CM	=	Set Of (4) 1 Meter Cables For Suspending CB22-4L-LKFS and CB24-6L-LKFS.

Remote Mount EM Drivers:

BLEM-CP-5C	=	5W Emergency Driver W/Conduit and Test Button
BLEM-CP-10C	=	10W Emergency Driver W/Conduit and Test Button
BLEM-CP-13C	=	13W Emergency Driver W/Conduit and Test Button

LUMEN TABLES

Series	Measurements	Low Lumens			Mid Lumens			High Lumens		
		3500K	4000K	5000K	3500K	4000K	5000K	3500K	4000K	5000K
CB22-4L-LKFS (-CCS)	Lumens	3,447	3,606	3,591	3,953	4,174	4,136	4,508	4,718	4,716
	Watt	25.58	24.54	25.34	29.68	28.75	29.63	34.61	33.38	34.78
	Efficacy	134.75	147.03	141.71	133.19	145.18	139.65	130.02	142.63	135.58

ELECTRICAL DATA

Series	CCT	Input Amps (A)								
		Low Lumens			Mid Lumens			High Lumens		
		120V	240V	277V	120V	240V	277V	120V	240V	277V
CB22-4L-LKFS (-CCS)	3500K	0.21	0.11	0.09	0.25	0.12	0.11	0.29	0.14	0.12
	4000K	0.20	0.10	0.09	0.24	0.12	0.10	0.28	0.14	0.12
	5000K	0.21	0.11	0.09	0.25	0.12	0.11	0.29	0.14	0.13

PHOTOMETRICS

CB22-4L-LKFS (-CCS)

Luminaire Data

Description	2X2 Center Basket Lumen and Kelvin Select
Total Lumens	4,205
Input Wattage	33
Efficacy (lm/W)	126
Spacing Criterion (0-180°)	1.3
Spacing Criterion (90-270°)	1.36

**Represents performance when set to 4000k and highest lumen output.*

Zonal Lumen Summary

Zone	Lumens	%Fixt
0-20°	475	11.3%
0-30°	1,020	24.3%
0-40°	1,694	40.3%
20-50°	1,943	46.2%
40-70°	1,995	47.4%
0-60°	3,108	73.9%
0-80°	4,092	97.3%
0-90°	4,205	100.0%
90-180°	0	0.0%
0-180°	4,205	100.0%

Polar Graph

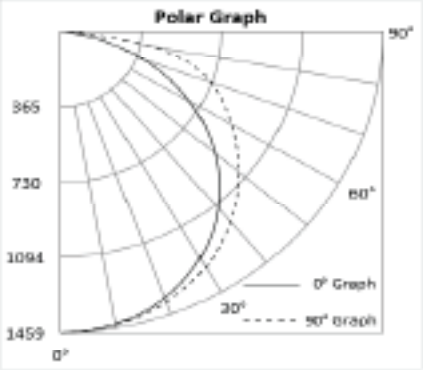

COMPATIBLE EMERGENCY DRIVERS-INSTALLED

Emergency Driver Part Number	EM5		EM10		EM13	
Model	Watts	EM Lumens	Watts	EM Lumens	Watts	EM Lumens
CB22-4L-LKFS (-CCS)	5	850	10	1300	1	1650

COMPATIBLE DIMMERS AND CONTROLS

Manufacturer	Model Number	Dimmer Range	Load Switching Capacity
Best Lighting	DMS-010V-T	10%-100%	800W
Best Lighting	DMS-010V-D	10%-100%	800W
Leviton	IP710-LFZ	10%-100%	1200W
Lutron	DVSTV	10%-100%	450W

PLUGS AND CORDS

When selecting a plug, use the following suffix choices.
Example: CB22-4L-LKFS-SW3
Note: Cords & plugs do not affect the ability to install sensors.

Part number suffix	Description	For use with
SW3	6' whip - 3 conductor (black/white/green)	Standard & UNC
SW4	6' whip - 4 conductor (black/white/green/red)	EM driver
SW5	6' whip - 5 conductor (black/white/green/purple/pink)	Dimming (standard & UNC)
SW6	6' whip - 6 conductor (black/white/green/red/purple/pink)	Dimming & EM driver

MOUNTING MEANS - ORDER SEPARATELY

- Optional Surface Mounting Kit (SMKF-22) mounts below the ceilings.
- Optional flange mounting kits provide for recessed installation on plaster or other hard ceilings. Attached Flange Mount Kit (FLANGEKIT22-ET) to ceiling joists or other stationary structures, and the panel is mounted flush to the ceiling.
- Optional cable mounting kits provide additional security, as well as suspended mounting. Attach one end of the Cable Mount Kit (PNL-CM) to luminaire earthquake clips using spring clips, and attach the other end to stationary structures using the adjustable, locking ceiling attachment (see picture below right).

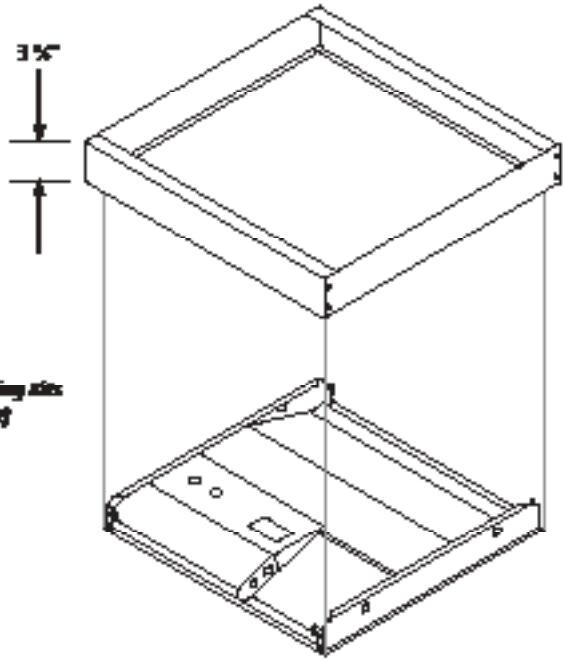

Surface Mounting Kits
(SMKF-22)

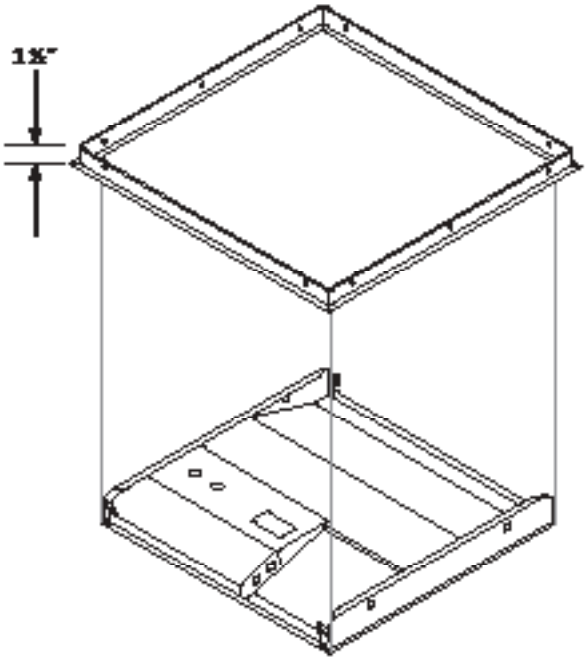

Flange Mount Kit
(FLANGEKIT22-ET)

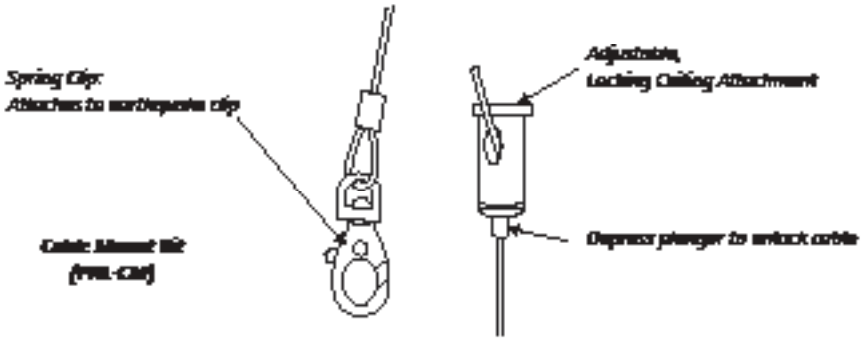

Cable Mount Kit
(PNL-CM)

CB24-LKFS

americanlite®

Lumen and Kelvin Field Selectable Center Basket

STANDARD

CERTIFIED | DLC LISTED | FCC | DAMP | IC RATED FOR INSULATED CEILINGS | 2.5kV Surge Protection

FEATURES

- *Field selectable 3500k (warm/neutral white), 4000k (neutral white) & 5000k (cool white) color temperatures.**
- *Long-life LEDs provide at least 196,000 hours of operation with at least 70% of initial lumen output (L_{70}).***
- *Provides a range of 4,500 to 5,800 nominal lumens.**
- *Uniform illumination with no visible LED pixilation.*
- *Universal 120-277 AC voltage (50-60Hz) is standard.*
- *0-10vdc, continuous dimming capability is standard.*
- *Power factor > 0.90.*
- *Total harmonic distortion < 20%.*
- *Color rendering index (R_a) > 80.*
- *Steel housing and PMMA lens.*
- *Easy installation in new construction or retrofit. Fits in standard 2' x 4' grid ceilings.*
- *Built-in earthquake clips provide secure installation in grid ceilings.*
- *Standard mounting options include recessed mounting in grid ceilings, or suspended mounting using earthquake clips. For other mounting options, see Mounting Means (page 4).*

* *Contact factory for other color temperatures and lumen packages.*
** *L70 hours are IES TM-21-11 calculated hours.*

WARRANTY & LISTINGS

- *cULus listed for damp locations and insulated ceilings in ambient temperatures from -25°C to 50°C (-13°F to 122°F).*
- *UL listed for maximum of 4, 12 AWG through branch circuit conductor.*
- *Inherently protected.*
- *Type IC rated for insulated ceilings.*
- *DLC approved.*
- *Low risk of flicker (per IEEE1789-2015) at 100% light output level.*
- *Complies with FCC Part 15, class A.*
- *Complies with IEEE C.62.41-2002, input transient surge protection (2.5kV).*
- *5-year warranty of all electronics and housing.*

DIMENSIONS

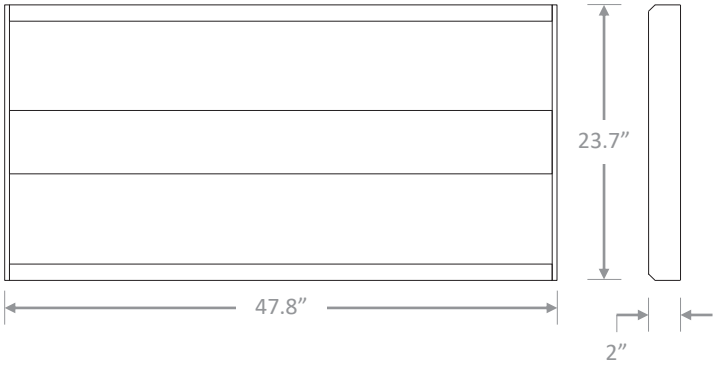

Weight: 11 lbs.

ORDERING INFORMATION

Example: CB24-6L-LKFS-EM13

Series	Nominal Lumen Output		Select	Externally Installed Emergency Drivers [1]		Accessories	
CB24	6L	6,000 nominal lumens	LKFS	EM5	755 lumens	DWS-010-T	0-10v dimmer, toggle switch
				EM10	1,617 lumens	DWS-010-D	0-10v dimmer, decora switch
				EM13	1,940 lumens		
				Blank	No emergency driver	IP710-DLZ	0-10v dimmer, button switch

[1] See emergency driver compatibility list (page 2).

COMPATIBLE EMERGENCY DRIVERS*

Emergency Driver Part Number	EM5		EM10		EM13	
Model	Watts	EM Lumens	Watts	EM Lumens	Watts	EM Lumens
CB24-6L-LKFS	5.0	755	10.7	1617	13.7	1940

* Suitable for ambient temperatures above 10°C (50°F).

ACCESSORIES (Order Separately)

Remote Mount Emergency Drivers*

BLEM-CP-5C = Emergency driver - EM5
BLEM-CP-10C = Emergency driver - EM10
BLEM-CP-13C = Emergency driver - EM13

* Suitable for ambient temperatures above 10°C (50°F).

COMPATIBLE DIMMERS & CONTROLS

Manufacturer	Model Number	Dimming Range	Load Switching Capacity
Americanlite	DWS-010V-T	10%-100%	600W
Americanlite	DWS-010V-D	10%-100%	600W
Leviton	IP710-LFZ	10%-100%	1200W
Lutron	DVSTV	10%-100%	450W

ELECTRICAL DATA

Series	Measurements	Low Lumens			Mid Lumens			High Lumens		
		3500K	4000K	5000K	3500K	4000K	5000K	3500K	4000K	5000K
CB24-6L-LKFS	Lumens	4466	4566	4460	4922	5062	5002	5653	5850	5675
	Watts	33	32	33	37	36	37	44	43	44
	Efficacy	134	141	134	132	139	134	128	137	129
	Input Current (A)	120V = 0.28A	120V = 0.27A	120V = 0.28A	120V = 0.31A	120V = 0.30A	120V = 0.31A	120V = 0.37A	120V = 0.36A	120V = 0.37A
		240V = 0.14A	240V = 0.13A	240V = 0.14A	240V = 0.15A	240V = 0.15A	240V = 0.15A	240V = 0.18A	240V = 0.18A	240V = 0.18A
		277V = 0.12A	277V = 0.12A	277V = 0.12A	277V = 0.13A	277V = 0.13A	277V = 0.13A	277V = 0.16A	277V = 0.16A	277V = 0.16A

PHOTOMETRIC DATA

CB24-6L-LKFS

Luminaire Data

Description	Center Basket 2X4 6L 5K - LKFS
Total Lumens	5,675
Input Wattage	44
Efficacy (lm/W)	129
Spacing Criterion (0-180°)	1.26
Spacing Criterion (90-270°)	1.28

Zonal Lumen Summary

Zone	Lumens	%Fixt
0-20°	689	12.1%
0-30°	1,465	25.8%
0-40°	2,407	42.4%
20-50°	2,706	47.7%
40-70°	2,630	46.3%
0-60°	4,305	75.9%
0-80°	5,526	97.4%
0-90°	5,671	99.9%
90-180°	4	0.1%
0-180°	5,675	100.0%

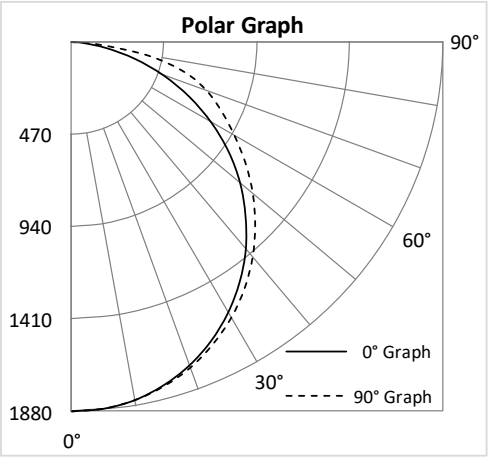

MOUNTING MEANS – ORDER SEPARATELY

- *Optional surface mounting kits (SMKT-24) mounts below the ceiling.*
- *Optional flange mounting kits provide for recessed installation on plaster or other hard ceilings. Attach Flange Mount Kit (FLANGEKIT24-ET) to ceiling joists or other stationary structures, and the panel is mounted flush to the ceiling.*
- *Optional cable mounting kits provide additional security, as well as suspended mounting. Attach one end of the Cable Mount Kit (PNL-CM) to luminaire earthquake clips using spring clips, and attach the other end to stationary structures using the adjustable, locking ceiling attachment (see picture below right).*

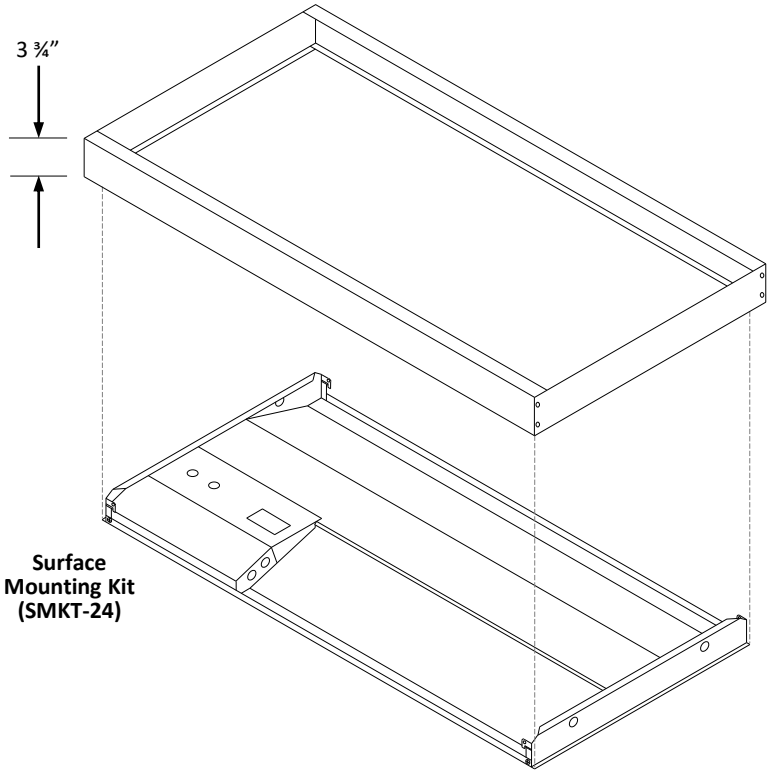

Surface Mounting Kit (SMKT-24)

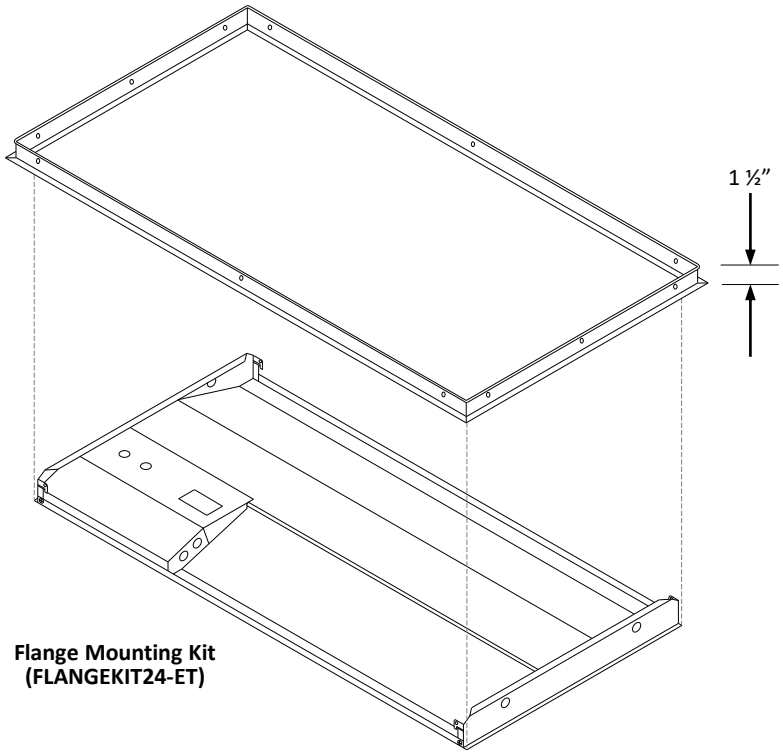

Flange Mounting Kit (FLANGEKIT24-ET)

Cable Mounting Kit (PNL-CM)

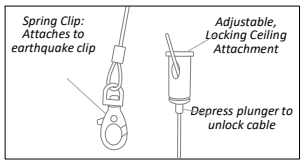

Cable Mount Kit:
- *Spring Clip*
- *Adjustable, locking ceiling attachment*

Wraps

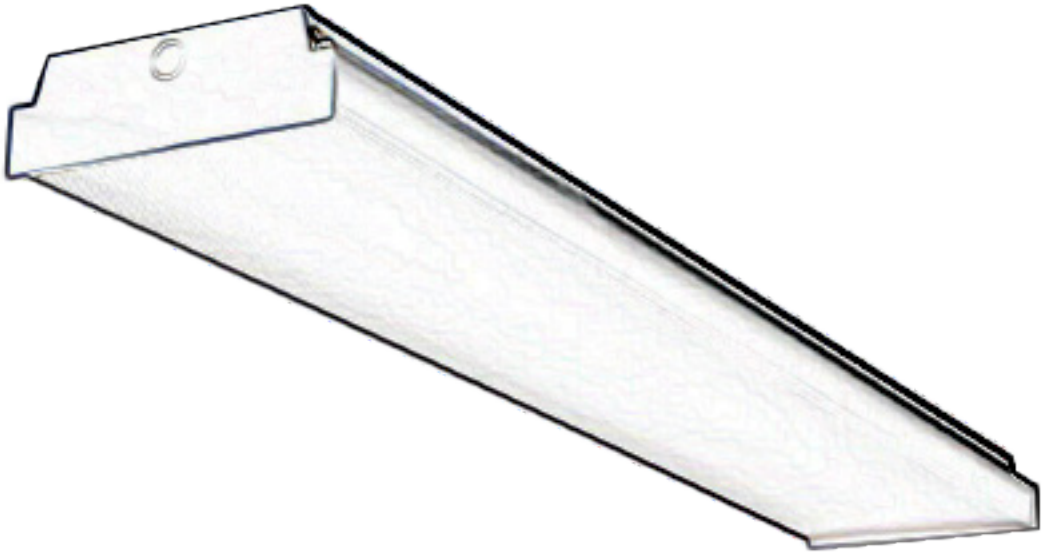

WR-LKFS

americanlite

Lumen and Kelvin Field Selectable Wrap Light

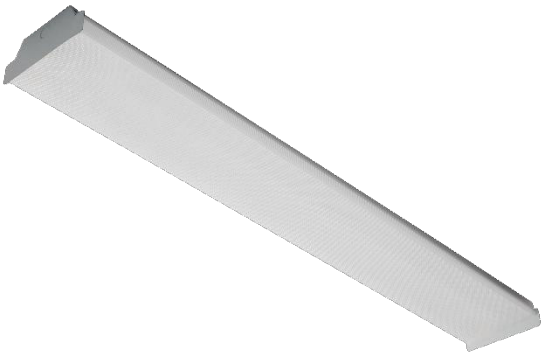

STANDARD

CERTIFIED | DLC LISTED | FCC | DAMP | 2.5kV Surge Protection

FEATURES

- *Field selectable 3500k (warm/neutral white), 4000k (neutral white), and 5000k (cool white) color temperatures.**
- *Long-life LEDs provide 196,000 hours of operation with at least 70% of initial lumen output (L_{70}), and 60,000 hours with at least 90% of initial lumen output (L_{90}).***
- *LED chromaticity based on ≤ 4-step ANSI quadrangles.*
- *LED color maintenance ≤ 0.002 chromaticity shift (Δu'v') over the initial 6,000 hours of operation.*
- *WR-5L-LKFS provides a range of 4,100 to 5,800 nominal lumens and 132 to 154 lumens per watt (LPW).**
- *Universal 120-277 AC voltage (50-60Hz) is standard.*
- *0-10vdc dimming drivers are standard.*
- *Power factor > 0.90.*
- *Total harmonic distortion < 20%.*
- *Color rendering index > 80.*
- *Steel housing and PMMA lens.*
- *Optional emergency drivers and occupancy sensors are available.*
- *Easy installation in new construction or retrofit.*

** Contact factory for other color temperatures and lumen packages.*
*** L_{70} hours are IES TM-21-11 calculated hours.*

WARRANTY & LISTINGS

- *cULus approved for damp locations in ambient temperatures from -20°C to 60°C (-4°F to 140°F).*
- *DLC approved.*
- *Complies with FCC Part 15, Class B.*
- *Complies with IEEE C.62.41-1991, Class A input transient surge protection (2.5kV).*
- *5-year warranty of all electronics and housing.*

DIMENSIONS

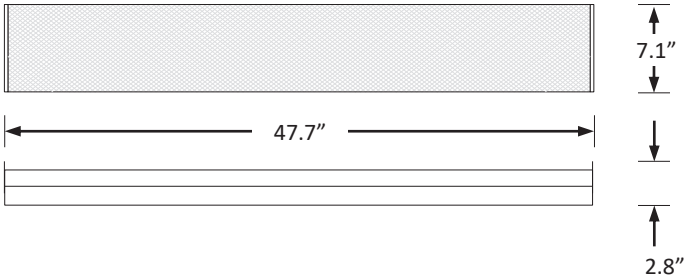

Weight: 8 lbs.

ORDERING INFORMATION

Example: WR-5L-LKFS-ODS-EM10-OBD

Series	Nominal Lumen Output		Select	Occupancy Sensor [1 2]		Internally Installed Emergency Drivers [3]		Controls	
WR	5L	5,000 nominal lumens	LKFS	OS	Passive infrared	EM10	1,390 lumens	BT	Bluetooth control
				ODS	Microwave	EM13	1,780 lumens	OBD	On board dimmer
				Blank	No occupancy sensor	Blank	No emergency driver	Blank	No control/dimmer

[1] Contact factory for other sensors.
[2] OS = passive infrared technology – features include on/off only. ODS = microwave technology – features include on/off, step-dimming, and daylight threshold. Default sensor settings: detection area = 100%, hold time = 20 minutes, stand-by period = 10 minutes, stand-by dimming level = 50%, daylight threshold = disabled. Remote control optional but not required, part number = MWAVEDHS-REM.
[3] See emergency driver compatibility list (page 2).

COMPATIBLE EMERGENCY DRIVERS*

Emergency Driver Part Number	EM10		EM13	
Model	Watts	EM Lumens	Watts	EM Lumens
WR-5L-LKFS	10	1320	13	1720

* Suitable for ambient temperatures above 10°C (50°F).

COMPATIBLE EMERGENCY DRIVERS INTERNALLY INSTALLED [1 2]

Model	Emergency Options
WR-5L-LKFS	EM10 EM13

[1] Suitable for ambient temperatures above 10°C (50°F).
[2] For list of remote mountable emergency drivers, see *ACCESSORIES.*

ACCESSORIES (Order Separately)

Remote Mount Emergency Drivers*

BLEM-CP-10C = Emergency driver - EM10
BLEM-CP-13C = Emergency driver - EM13

* Suitable for ambient temperatures above 10°C (50°F).

COMPATIBLE DIMMERS & CONTROLS

Manufacturer	Model Number	Dimming Range	Load Switching Capacity
Americanlite	DWS-010V-T	10%-100%	600W
Americanlite	DWS-010V-D	10%-100%	600W
Leviton	IP710-LFZ	10%-100%	1200W
Lutron	DVSTV	10%-100%	450W
Vealite*	PPA401S	10%-100%	1200W
Keilton	PPA102S	10%-100%	360W

* Remote control required (sold separately). Part number WP401.

ELECTRICAL DATA

Series	Measurements	Low Lumens			Mid Lumens			High Lumens		
		3500K	4000K	5000K	3500K	4000K	5000K	3500K	4000K	5000K
WR-5L-LKFS	Lumens	4155	4336	4233	4750	4932	4817	5423	5837	5503
	Watts	30	28	30	35	32	35	41	39	41
	Efficacy	138	154	141	135	152	137	132	149	134
	Input Current (A)	120V = 0.25A	120V = 0.23A	120V = 0.25A	120V = 0.29A	120V = 0.27A	120V = 0.29A	120V = 0.34A	120V = 0.33A	120V = 0.34A
		240V = 0.13A	240V = 0.12A	240V = 0.13A	240V = 0.15A	240V = 0.13A	240V = 0.15A	240V = 0.17A	240V = 0.16A	240V = 0.17A
		277V = 0.11A	277V = 0.10A	277V = 0.11A	277V = 0.13A	277V = 0.12A	277V = 0.13A	277V = 0.15A	277V = 0.14A	277V = 0.15A

PHOTOMETRIC DATA

WR-5L-LKFS

Luminaire Data

Description	4' WRAP LIGHT 5L 5K - LKFS
Total Lumens	5,504
Input Wattage	41
Efficacy (lm/W)	134
Spacing Criterion (0-180°)	1.28
Spacing Criterion (90-270°)	1.22

Zonal Lumen Summary

Zone	Lumens	%Fixt
0-20°	665	12.1%
0-30°	1,403	25.5%
0-40°	2,280	41.4%
20-50°	2,514	45.7%
40-70°	2,339	42.5%
0-60°	3,986	72.4%
0-80°	5,034	91.5%
0-90°	5,228	95.0%
90-180°	276	5.0%
0-180°	5,504	100.0%

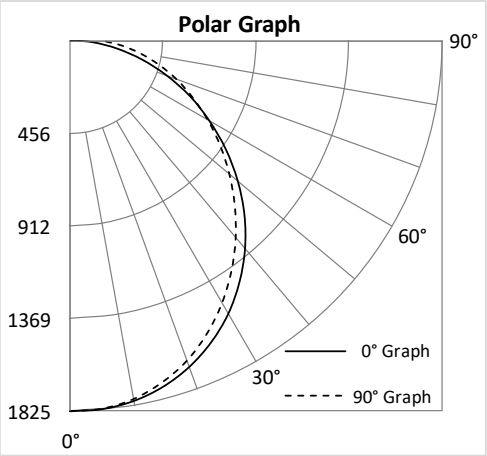

americanlite®

Lumen and Kelvin Field Selectable Wrap Light Economy

STANDARD

CERTIFIED | DLC LISTED | FCC | DAMP | 1.0kV Surge Protection

FEATURES

- *Field selectable 3500k (warm/neutral white), 4000k (neutral white), and 5000k (cool white) color temperatures.**
- *Long-life LEDs provide 196,000 hours of operation with at least 70% of initial lumen output (L_{70}), and 60,000 hours with at least 90% of initial lumen output (L_{90}).***
- *LED chromaticity based on ≤ 7-step ANSI quadrangles.*
- *Selectable lumen outputs range from 4,000, 5,000 to 6,000 nominal lumens.**
- *Universal 120-277 AC voltage (50-60Hz) is standard.*
- *0-10vdc dimming is standard.*
- *Power factor > 0.90.*
- *Total harmonic distortion < 20%.*
- *Color rendering index > 80.*
- *Steel housing.*
- *Polycarbonate lens.*
- *Easy installation in new construction or retrofit applications.*

* *Contact factory for other color temperatures and lumen packages.*
** *L70 hours are IES TM-21-11 calculated hours.*

WARRANTY & LISTINGS

- *cULus listed for damp locations in ambient temperatures from -25°C to 50°C (-13°F to 122°F).*
- *DLC approved.*
- *Complies with FCC Part 15, class A.*
- *Complies with IEEE C.62.41-2002, input transient protection (1.0kV).*
- *Flicker-free per IEEE1789-2015 (no observable adverse effects of flicker at 100% light output level).*
- *5-year warranty of all electronics and housing.*

DIMENSIONS

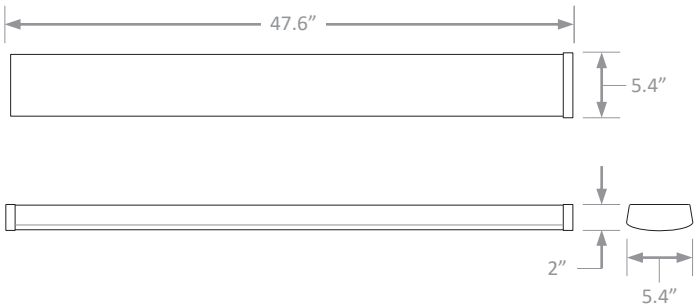

Weight: 3.7 lbs.

ORDERING INFORMATION

Example: WRE-6L-LKFS

Series	Nominal Lumen Output		Select
WRE	6L	6,000 nominal lumens	LKFS

ELECTRICAL DATA

Series	Measurements	Low Lumens			Mid Lumens			High Lumens		
		3500K	4000K	5000K	3500K	4000K	5000K	3500K	4000K	5000K
WRE-LKFS	Lumens	3827	3925	3966	4756	5017	4936	5531	5880	5732
	Watts	30	30	30	39	39	39	47	45	47
	Efficacy	126	131	131	122	128	127	118	131	122
	Input Current (A)	120V = 0.25A	120V = 0.25A	120V = 0.25A	120V = 0.33A	120V = 0.33A	120V = 0.33A	120V = 0.39A	120V = 0.38A	120V = 0.39A
		240V = 0.13A	240V = 0.13A	240V = 0.13A	240V = 0.16A	240V = 0.16A	240V = 0.16A	240V = 0.20A	240V = 0.19A	240V = 0.20A
		277V = 0.11A	277V = 0.11A	277V = 0.11A	277V = 0.14A	277V = 0.14A	277V = 0.14A	277V = 0.17A	277V = 0.16A	277V = 0.17A

PHOTOMETRIC DATA

WRE-6L-LKFS

Luminaire Data

Description	ECONOMY 6L 5K - LKFS
Total Lumens	5,734
Input Wattage	47
Efficacy (lm/W)	123
Spacing Criterion (0-180°)	1.22
Spacing Criterion (90-270°)	1.14

Zonal Lumen Summary

Zone	Lumens	%Fixt
0-20°	795	13.9%
0-30°	1,667	29.1%
0-40°	2,683	46.8%
20-50°	2,897	50.5%
40-70°	2,517	43.9%
0-60°	4,560	79.5%
0-80°	5,568	97.1%
0-90°	5,694	99.3%
90-180°	40	0.7%
0-180°	5,734	100.0%

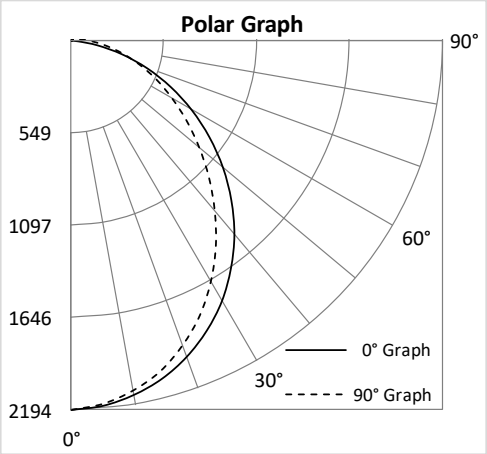

COMPATIBLE DIMMERS & CONTROLS

Manufacturer	Model Number	Dimming Range	Load Switching Capacity
Americanlite	DWS-010V-T	10%-100%	600W
Americanlite	DWS-010V-D	10%-100%	600W
Leviton	IP710-LFZ	10%-100%	1200W
Lutron	DVSTV	10%-100%	450W

Undercabinet Light
Selectable CCT

STANDARDS

Intertek · FCC · TITLE 24 JA8-2022-E · DAMP · 1kV Surge Protection

HOUSING

- Aluminum, white housing.

ELECTRICAL

- Operating temperature (ambient):-20°C to 45°C (-4°F to 113°F) .
- Universal 120V AC voltage (60Hz) is standard.
- UC9-3L-5CCT = 4W
- UC12-8L-5CCT = 8W
- UC18-12L-5CCT = 12W
- UC24-16L-5CCT = 16W
- UC36-23L-5CCT = 24W
- Two or more lights can be linked.(see page 2 for run limitations)
- Maximum Load: Maximum limit of 2A per linking circuit.
- Triac dimming.
- Input transient surge protection = 1kV.
- Power factor > 0.90.
- Total Harmonic distortion < 20%.

OPTICAL SYSTEM

- Polycarbonate diffuser.
- Rotatable light bar swivel 65°.
- Field selectable 2700k(soft white), 3000k(warm white), 3500k(warm/neutral white), 4000k (neutral white) and 5000k (cool white) color temperatures*.
- Delivers a range of 300 to 2,300 nominal lumens*.
- Long-life LEDs provide 167,000 hours of operation with at least 70% of initial lumen output (L70), and 51,000 hours with at least 90% of initial lumen output (L90)**.
- LED color maintenance < 0.0059 chromaticity shift (Δu'v') over the initial 6,000 hours of operation.
- Integrated PIR sensor is standard.
- Color rendering index > 90.

* Factory Default kelvin temperature 4000k.
**L70 hours are IES TM-21-11 calculated hours.

MOUNTING

- Surface mounting.

CODE COMPLIANCE

- cETLus listed for damp locations.
- Complies with FCC part 15, class B.
- Complies with Title 24.

WARRANTY

- 5 year warranty on all electronics and housing.

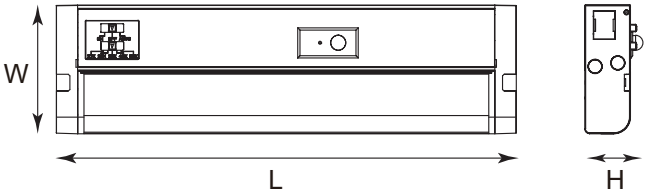

Model #	L (in)	W (in)	H (in)	Weight (lbs)
UC9-3L-5CCT	8.98	3.35	1.51	1.06
UC12-8L-5CCT	11.97	3.35	1.51	1.19
UC18-12L-5CCT	17.99	3.35	1.51	1.33
UC24-16L-5CCT	23.98	3.35	1.51	1.50
UC36-23L-5CCT	36.02	3.35	1.51	1.61

ORDERING INFORMATION

Example: UC9-3L-5CCT

Model	Nominal Lumen Output		Kelvin Selectable	
UC9	3L	300 lm	5CCT	2700 / 3000 / 3500 / 4000 / 5000K
UC12	8L	800 lm		
UC18	12L	1200 lm		
UC24	16L	1600 lm		
UC36	23L	2300 lm		

ACCESSORIES (ORDER SEPARATELY)

Linking Connector

ZZ-CORDPLUG-UC-4C3P = 120V, 4FT white cord with NEMA 5-15 Plug
ZZ-UC-CONNECT-2IN = 2 inch Linking Connector Cable
ZZ-UC-CONNECT-2.5IN = 2.5 inch Linking Connector Cable
ZZ-UC-CONNECT-3IN = 3 inch Linking Connector Cable
ZZ-UC-CONNECT-24IN = 24 inch Linking Connector Cable

COMPATIBLE DIMMERS AND CONTROLS

Manufacturer	Model Number		
Lutron	TG-600PR-WH	CTCL-153PDH-WH	TGCL-153PH-LA
	SLV-600P-AL	DVCL-153P	MSCL-OP153M
	PD-6WCL	CT-103PR-WH	DVWCL-153PH
	RCL-153RNL	-	-
Leviton	6672	RNL06	-

MAXIMUM RUN

Series	Max. Quantity	Max. Size
UC9-3L-5CCT	120 Units	90-ft
UC12-8L-5CCT	60 Units	60-ft
UC18-12L-5CCT	40 Units	60-ft
UC24-16L-5CCT	30 Units	60-ft
UC36-23L-5CCT	20 Units	60-ft

NOTE: Maximum limit of 2A per linking circuit.

LUMEN TABLES

Series	Measurements	Lumens				
		2700K	3000K	3500K	4000K	5000K
UC9-3L-5CCT	Lumens	307	326	339	344	340
	Watts	4.02	4	3.95	3.98	4.01
	Efficacy	76.37	81.50	85.82	86.43	84.79

Series	Measurements	Lumens				
		2700K	3000K	3500K	4000K	5000K
UC12-8L-5CCT	Lumens	677	714	752	764	751
	Watts	7.96	7.86	7.71	7.84	7.98
	Efficacy	85.05	90.84	97.54	97.45	94.11

Series	Measurements	Lumens				
		2700K	3000K	3500K	4000K	5000K
UC18-12L-5CCT	Lumens	1,019	1,082	1,138	1,152	1,136
	Watts	11.95	11.77	11.49	11.68	11.94
	Efficacy	85.27	91.93	99.04	98.63	95.14

Series	Measurements	Lumens				
		2700K	3000K	3500K	4000K	5000K
UC24-16L-5CCT	Lumens	1,453	1,544	1,612	1,638	1,614
	Watts	15.94	15.63	15.31	15.53	15.9
	Efficacy	91.15	98.78	105.29	105.47	101.51

Series	Measurements	Lumens				
		2700K	3000K	3500K	4000K	5000K
UC36-23L-5CCT	Lumens	2,096	2,202	2,298	2,338	2,322
	Watts	23.65	22.98	22.54	22.92	23.64
	Efficacy	88.63	95.82	101.95	102.01	98.22

ELECTRICAL DATA

Series	CCT	Input Amps (A) Lumens 120V
UC9-3L-5CCT	2700K	0.03
	3000K	0.03
	3500K	0.03
	4000K	0.03
	5000K	0.03

Series	CCT	Input Amps (A) Lumens 120V
UC12-8L-5CCT	2700K	0.07
	3000K	0.07
	3500K	0.06
	4000K	0.07
	5000K	0.07

Series	CCT	Input Amps (A) Lumens 120V
UC18-12L-5CCT	2700K	0.10
	3000K	0.10
	3500K	0.10
	4000K	0.10
	5000K	0.10

Series	CCT	Input Amps (A) Lumens 120V
UC24-16L-5CCT	2700K	0.13
	3000K	0.13
	3500K	0.13
	4000K	0.13
	5000K	0.13

Series	CCT	Input Amps (A) Lumens 120V
UC36-23L-5CCT	2700K	0.20
	3000K	0.19
	3500K	0.19
	4000K	0.19
	5000K	0.20

Undercabinet Economy Kelvin Field Selectable

STANDARD

FEATURES

- *Field selectable 2700k (soft white), 3000k (warm white), 3500k (warm/neutral white), 4000k (neutral white) and 5000k (cool white) color temperatures.**
- *Long-life LEDs provide up to 196,000 hours of operation with at least 70% of initial lumen output (L_{70}).***
- *Available models provide from 334 to 1,543 nominal lumens.**
- *120 AC voltage (60Hz) is standard.*
- *Power factor > 90.*
- *Total harmonic distortion < 20%.*
- *Color rendering index > 90.*
- *Steel housing.*
- *Polycarbonate lens.*
- *Knockouts on sides and back simplify electrical connections.*
- *Keyhole slots provide for easy installation in new construction or retrofit applications.*

* *Contact factory for other color temperatures and lumen packages.*
** *L70 hours are IES TM-21-11 calculated hours.*

WARRANTY & LISTINGS

- *cULus listed for damp locations.*
- *Energy Star certified.*
- *Complies with FCC Part 15, class B.*
- *Complies with ANSI/IEEE C62.41.1-2002, surge immunity protection (2.5kV).*
- *5-year warranty of all electronics and housing.*

DIMENSIONS

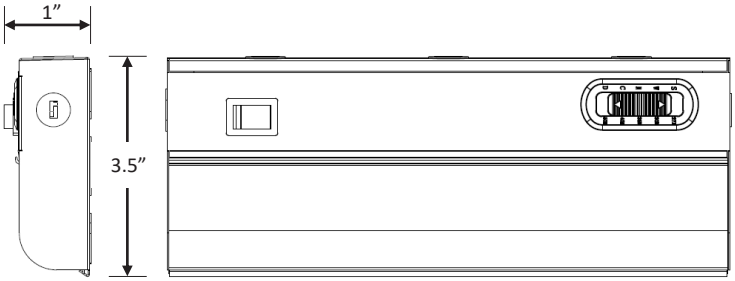

Series	UCE-9	UCE-12	UCE-18	UCE-21	UCE-24	UCE-33	UCE-42
Length	9"	12"	18"	21"	24"	33"	42"
Weight (lbs)	0.80	1	1.30	1.60	1.70	2.40	3

ORDERING INFORMATION

Example: UCE-24-KFS

Series	Length (ft.)	Color Temperature	
UCE	9 12 18 21 24 33 42	KFS*	2700k 3000k 3500k 4000k 5000k

* *Field selectable kelvin temperatures.*

ELECTRICAL DATA

Series	Measurements	UCE-9-KFS					UCE-12-KFS				
		2700k	3000k	3500k	4000K	5000K	2700k	3000k	3500k	4000K	5000K
UCE-KFS	Lumens	334	391	398	412	391	390	414	439	450	444
	Watts	5	5	5	5	5	5	5	5	5	5
	Efficacy	66	73	82	86	79	78	83	90	92	88
	Input Current (A)	120V = 0.04A	120V = 0.04A	120V = 0.04A	120V = 0.04A	120V = 0.04A	120V = 0.04A	120V = 0.04A	120V = 0.04A	120V = 0.04A	120V = 0.04A
		240V = 0.02A	240V = 0.02A	240V = 0.02A	240V = 0.02A	240V = 0.02A	240V = 0.02A	240V = 0.02A	240V = 0.02A	240V = 0.02A	240V = 0.02A
		277V = 0.02A	277V = 0.02A	277V = 0.02A	277V = 0.02A	277V = 0.02A	277V = 0.02A	277V = 0.02A	277V = 0.02A	277V = 0.02A	277V = 0.02A

Series	Measurements	UCE-18-KFS					UCE-21-KFS				
		2700k	3000k	3500k	4000K	5000K	2700k	3000k	3500k	4000K	5000K
UCE-KFS	Lumens	673	719	760	770	720	665	703	742	764	746
	Watts	9	9	9	9	9	9	9	9	9	9
	Efficacy	75	81	88	88	79	76	81	87	90	85
	Input Current (A)	120V = 0.08A	120V = 0.08A	120V = 0.08A	120V = 0.08A	120V = 0.08A	120V = 0.08A	120V = 0.08A	120V = 0.08A	120V = 0.08A	120V = 0.08A
		240V = 0.04A	240V = 0.04A	240V = 0.04A	240V = 0.04A	240V = 0.04A	240V = 0.04A	240V = 0.04A	240V = 0.04A	240V = 0.04A	240V = 0.04A
		277V = 0.03A	277V = 0.03A	277V = 0.03A	277V = 0.03A	277V = 0.03A	277V = 0.03A	277V = 0.03A	277V = 0.03A	277V = 0.03A	277V = 0.03A

Series	Measurements	UCE-24-KFS					UCE-33-KFS				
		2700k	3000k	3500k	4000K	5000K	2700k	3000k	3500k	4000K	5000K
UCE-KFS	Lumens	696	736	779	803	786	1064	1152	1214	1245	1202
	Watts	9	9	9	9	9	14	14	14	14	14
	Efficacy	76	82	88	91	86	76	84	90	91	85
	Input Current (A)	120V = 0.08A	120V = 0.08A	120V = 0.08A	120V = 0.08A	120V = 0.08A	120V = 0.12A	120V = 0.12A	120V = 0.12A	120V = 0.12A	120V = 0.12A
		240V = 0.04A	240V = 0.04A	240V = 0.04A	240V = 0.04A	240V = 0.04A	240V = 0.06A	240V = 0.06A	240V = 0.06A	240V = 0.06A	240V = 0.06A
		277V = 0.03A	277V = 0.03A	277V = 0.03A	277V = 0.03A	277V = 0.03A	277V = 0.05A	277V = 0.05A	277V = 0.05A	277V = 0.05A	277V = 0.05A

Series	Measurements	UCE-42-KFS				
		2700k	3000k	3500k	4000K	5000K
UCE-KFS	Lumens	1315	1415	1514	1543	1488
	Watts	18	18	18	18	18
	Efficacy	72	79	87	88	82
	Input Current (A)	120V = 0.15A	120V = 0.15A	120V = 0.15A	120V = 0.15A	120V = 0.15A
		240V = 0.08A	240V = 0.08A	240V = 0.08A	240V = 0.08A	240V = 0.08A
		277V = 0.06A	277V = 0.06A	277V = 0.06A	277V = 0.06A	277V = 0.06A

ALDI4-5CCT

americanlite®

4FT Architectural linear
Direct-Indirect
Lumen & Kelvin Selectable

STANDARDS

c UL us LISTED | FCC | DAMP | 2.5kV Surge Protection

HOUSING

- Premium powder-coat,sheet metal stamping, white or black housing.

ELECTRICAL

- Operating temperature (ambient):
  -20°C to 50°C (-4°F to 122°F) when fixture is mounted at least 18" from ceiling;
  -20°C to 40°C (-4°F to 104°F) when surface mounted.
- Universal 120-277V AC voltage (50-60Hz) is standard.
- 0-10VDC dimming drivers are standard.
- Tooless linking of up to 10 fixture/ connector @120V.
- Power cord sold separately, required for suspension, cable and T-grid mounting.
- Input transient surge protection = 2.5kV.
- Power factor > 0.90.
- Total Harmonic distortion < 20%.

OPTICAL SYSTEM

- PMMA Lens.
- Field selectable 2700k(soft white), 3000k(warm white), 3500k(warm/neutral white), 4000k (neutral white) and 5000k (cool white) color temperatures*.
- Four selectable light output settings provide 2,396 to 5,078 nominal lumens (see lumen tables on page 5)*.
- Switchable between a combination of up-light and down-light. (see lumen tables on page 5.)
- Long-life LEDs provide 175,000 hours of operation with at least 70% of initial lumen output (L70), and 53,000 hours with at least 90% of initial lumen output (L90)**.
- LED color maintenance < -0.0036 chromaticity shift (Δu'v') over the initial 6,000 hours of operation.
- Color rendering index > 80.

* Factory Default kelvin temperature 4000k and highest lumen output.
**L70 & L90 hours are IES TM-21-11 calculated hours.

MOUNTING+

- Optional recessed mount kit.
- Optional surface /wall mount kit.
- Optional cable mount kit.
- Optional suspension mount kit.
- Optional T-Grid suspension mount kit.

+ Mounting means required and sold separately.

CODE COMPLIANCE

- cULus listed for damp locations.
- Complies with FCC part 15, class A.

WARRANTY

- 5 year warranty on all electronics and housing.

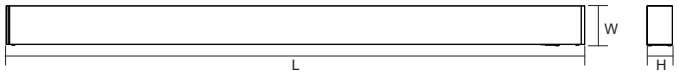

Model #	L (in)	W (in)	H (in)	Weight (lbs)
ALDI4-5432L-5CCT	48.15	2.13	3.33	5.53
ALDI-CONNECT-L	13.13	13.13	3.3	2.98
ALDI-CONNECT-T	13.13	13.43	3.3	2.98
ALDI-CONNECT-X	13.43	13.43	3.3	2.98

ORDERING INFORMATION

Example: ALDI4-5432L-5CCT-WHT

Series	Nominal Lumen Output (Selectable)		Kelvin Selectable	Housing Color
ALDI4	5432L	5,000 / 4,000 / 3,000 / 2,000 lm	5CCT 2700K / 3000K / 3500K / 4000K / 5000K	WHT White BLK Black

ACCESSORIES (ORDER SEPARATELY)

Connectors

ALDI-CONNECT-L-WHT	=	“L” shape Connector for ALDI4-5432L-5CCT, White
ALDI-CONNECT-L-BLK	=	“L” shape Connector for ALDI4-5432L-5CCT, Black
ALDI-CONNECT-T-WHT	=	“T” shape Connector for ALDI4-5432L-5CCT, White
ALDI-CONNECT-T-BLK	=	“T” shape Connector for ALDI4-5432L-5CCT, Black
ALDI-CONNECT-X-WHT	=	“X” shape Connector for ALDI4-5432L-5CCT, White
ALDI-CONNECT-X-BLK	=	“X” shape Connector for ALDI4-5432L-5CCT, Black

Power Cable

ALDI-CORD-WHT	=	4' Power Cord for ALDI4-5432L-5CCT, white
ALDI-CORD-BLK	=	4' Power Cord for ALDI4-5432L-5CCT, black
ALDI-CORD-WHT-15C5	=	15' Power Cord for ALDI4-5432L-5CCT, white
ALDI-CORD-BLK-15C5	=	15' Power Cord for ALDI4-5432L-5CCT, black

Mounting Methods

ALDI4-MT-RECESSED	=	Recessed Mount Kit for ALDI4-5432L-5CCT
ALDI4-MT-T-GRID-WHT	=	T-Grid Mount Kit for ALDI4-5432L-5CCT, white
ALDI4-MT-T-GRID-BLK	=	T-Grid Mount Kit for ALDI4-5432L-5CCT, black
ALDI-MT-SUSPENSION-WHT	=	Suspension Mount Kit for ALDI4-5432L-5CCT, white
ALDI-MT-SUSPENSION-BLK	=	Suspension Mount Kit for ALDI4-5432L-5CCT, black
ALDI-MT-SURFACE-WHT	=	Surface & Wall Mount Kit for ALDI4-5432L-5CCT, white
ALDI-MT-SURFACE-BLK	=	Surface & Wall Mount Kit for ALDI4-5432L-5CCT, black
ALDI-MT-CABLE	=	Cable Mount Kit for ALDI4-5432L-5CCT L, T & X connectors

COMPATIBLE DIMMERS AND CONTROLS

Manufacturer	Model Number	Dimmer Range	Load Switching Capacity
Americanlite	DWS-010V-T	10%-100%	600W
Americanlite	DWS-010V-D	10%-100%	600W
Leviton	IP710-LFZ	10%-100%	1200W
Lutron	DVSTV	10%-100%	450W

CONNECTOR DIMENSIONS

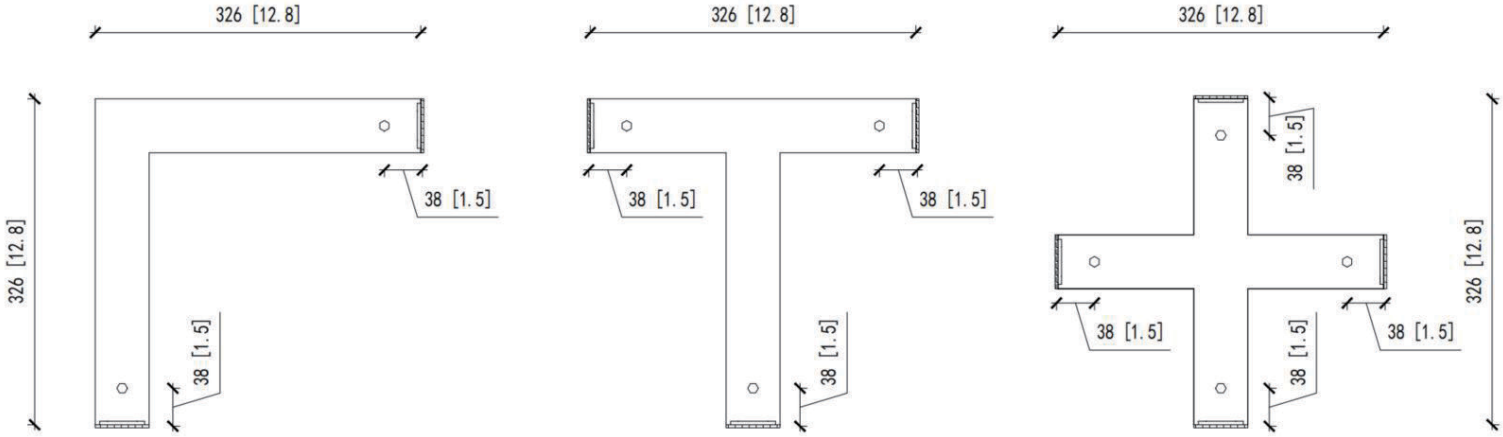

INSTALLATION ACCESSORIES

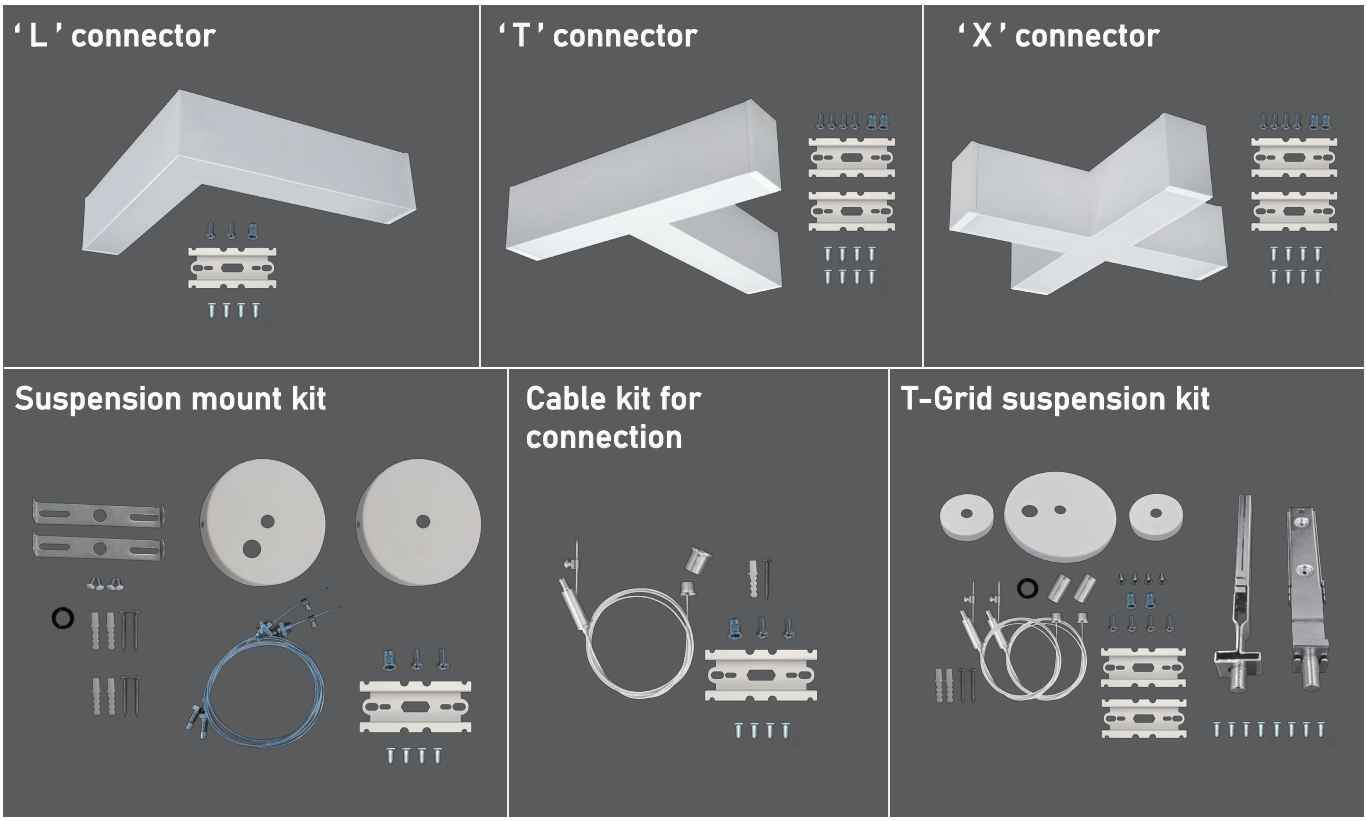

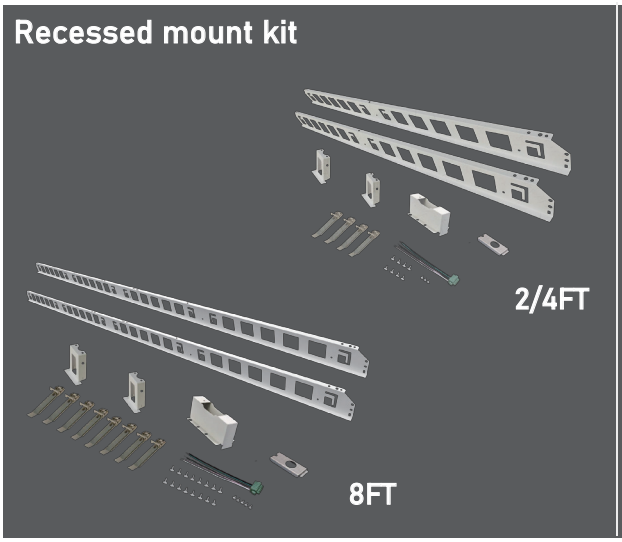
Recessed mount kit
2/4FT
8FT

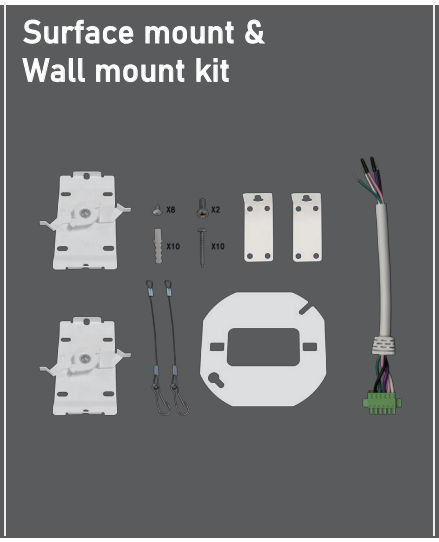
Surface mount &
Wall mount kit

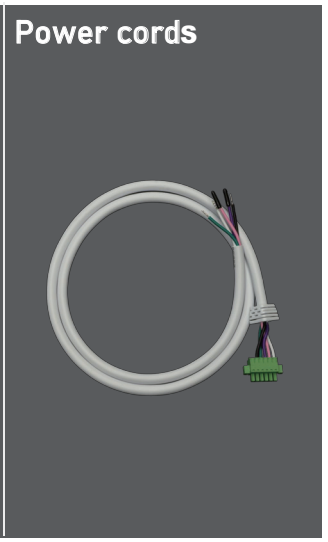
Power cords

LUMEN TABLES*

Series	Measurements	100% Down / 0% Up					70% Down / 30% Up					50% Down / 50% Up				
		2700K	3000K	3500K	4000K	5000K	2700K	3000K	3500K	4000K	5000K	2700K	3000K	3500K	4000K	5000K
ALDI4-5432L-5CCT-WHT	Lumens	4,617	4,642	4,673	4,698	4,729	4,679	4,683	4,715	4,735	4,764	4,738	4,759	4,791	4,809	4,843
	Watts	40.28	40.25	40.27	40.4	40.29	41.36	41.45	41.42	41.43	41.26	41.11	41.32	41.27	41.25	41.01
	Efficacy	114.62	115.34	116.05	116.29	117.37	113.12	112.99	113.84	114.28	115.47	115.25	115.17	116.08	116.58	118.09

Series	Measurements	100% Down / 0% Up					70% Down / 30% Up					50% Down / 50% Up				
		2700K	3000K	3500K	4000K	5000K	2700K	3000K	3500K	4000K	5000K	2700K	3000K	3500K	4000K	5000K
ALDI4-5432L-5CCT-BLK	Lumens	4,903	4,948	5,053	5,078	4,949	4,842	4,897	5,015	5,044	4,896	4,761	4,799	4,942	5,008	4,852
	Watts	41.81	40.76	41.96	40.77	41.78	42.09	41.48	42.21	41.49	42.03	42.33	42.49	42.5	42.5	42.3
	Efficacy	117.26	121.39	120.43	124.55	118.47	115.03	118.05	118.82	121.58	116.50	112.47	112.94	116.28	117.84	114.70

** Contact factory for additional performance details.*

ELECTRICAL DATA

Series	CCT	Input Amps (A)								
		100% Down / 0% Up			70% Down / 30% Up			50% Down / 50% Up		
		120V	240V	277V	120V	240V	277V	120V	240V	277V
ALDI4-5432L-5CCT-WHT	2700k	0.34	0.17	0.15	0.34	0.17	0.15	0.34	0.17	0.15
	3000k	0.34	0.17	0.15	0.35	0.17	0.15	0.34	0.17	0.15
	3500k	0.34	0.17	0.15	0.35	0.17	0.15	0.34	0.17	0.15
	4000k	0.34	0.17	0.15	0.35	0.17	0.15	0.34	0.17	0.15
	5000k	0.34	0.17	0.15	0.34	0.17	0.15	0.34	0.17	0.15

Series	CCT	Input Amps (A)								
		100% Down / 0% Up			70% Down / 30% Up			50% Down / 50% Up		
		120V	240V	277V	120V	240V	277V	120V	240V	277V
ALDI4-5432L-5CCT-BLK	2700k	0.35	0.17	0.15	0.35	0.18	0.15	0.35	0.18	0.15
	3000k	0.34	0.17	0.15	0.35	0.17	0.15	0.35	0.18	0.15
	3500k	0.35	0.17	0.15	0.35	0.18	0.15	0.35	0.18	0.15
	4000k	0.34	0.17	0.15	0.35	0.17	0.15	0.35	0.18	0.15
	5000k	0.35	0.17	0.15	0.35	0.18	0.15	0.35	0.18	0.15

PHOTOMETRICS

ALDI4-5432L-5CCT-WHT (100% Down / 0% Up)

Luminaire Data

Description	4' Linear direct/indirect Lumen/kelvin select
Total Lumens	4,635
Input Wattage	40
Efficacy (lm/W)	116
Spacing Criterion (0-180°)	1.24
Spacing Criterion (90-270°)	1.22

Photometric based on 2700k and highest lumen setting

Zonal Lumen Summary

Zone	Lumens	%Fixt	Zone	Lumens	%Fixt
0-20°	621	13.4%	60-80°	866	18.7%
0-30°	1,304	28.1%	70-80°	318	6.9%
0-40°	2,111	45.5%	80-90°	98	2.1%
0-60°	3,655	78.9%	90-110°	4	0.1%
0-80°	4,521	97.5%	90-120°	5	0.1%
0-90°	4,619	99.7%	90-130°	7	0.2%
10-90°	4,457	96.2%	90-150°	11	0.2%
20-40°	1,490	32.2%	90-180°	16	0.3%
20-50°	2,308	49.8%	110-180°	12	0.3%
40-70°	2,092	45.1%	0-180°	4,635	100.0%

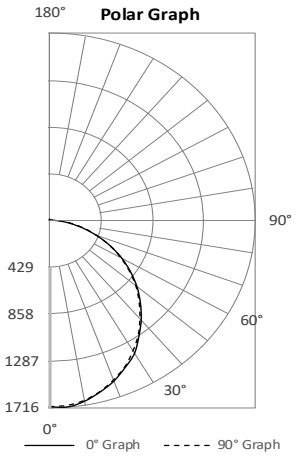

ALDI4-5432L-5CCT-WHT (70% Down / 30% Up)

Luminaire Data

Description	4' Linear direct/indirect Lumen/kelvin select
Total Lumens	4,717
Input Wattage	41
Efficacy (lm/W)	116
Spacing Criterion (0-180°)	1.24
Spacing Criterion (90-270°)	1.22

Photometric based on 2700k and highest lumen setting

Zonal Lumen Summary

Zone	Lumens	%Fixt	Zone	Lumens	%Fixt
0-20°	446	9.5%	60-80°	629	13.3%
0-30°	937	19.9%	70-80°	232	4.9%
0-40°	1,517	32.2%	80-90°	73	1.6%
0-60°	2,630	55.8%	90-110°	116	2.5%
0-80°	3,259	69.1%	90-120°	287	6.1%
0-90°	3,332	70.6%	90-130°	512	10.9%
10-90°	3,216	68.2%	90-150°	1,003	21.3%
20-40°	1,071	22.7%	90-180°	1,385	29.4%
20-50°	1,660	35.2%	110-180°	1,269	26.9%
40-70°	1,510	32.0%	0-180°	4,717	100.0%

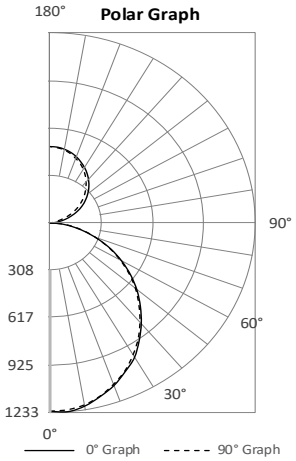

ALDI4-5432L-5CCT-WHT (50% Down / 50% Up)

Luminaire Data

Description	4' Linear direct/indirect Lumen/kelvin select
Total Lumens	4,741
Input Wattage	41
Efficacy (lm/W)	115
Spacing Criterion (0-180°)	N.A.
Spacing Criterion (90-270°)	N.A.

Photometric based on 2700k and highest lumen setting

Zonal Lumen Summary

Zone	Lumens	%Fixt	Zone	Lumens	%Fixt
0-20°	316	6.7%	60-80°	449	9.5%
0-30°	663	14.0%	70-80°	167	3.5%
0-40°	1,073	22.6%	80-90°	55	1.2%
0-60°	1,862	39.3%	90-110°	190	4.0%
0-80°	2,311	48.7%	90-120°	483	10.2%
0-90°	2,366	49.9%	90-130°	872	18.4%
10-90°	2,283	48.2%	90-150°	1,717	36.2%
20-40°	758	16.0%	90-180°	2,375	50.1%
20-50°	1,174	24.8%	110-180°	2,185	46.1%
40-70°	1,071	22.6%	0-180°	4,741	100.0%

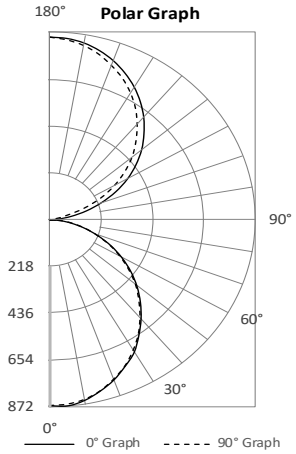

ALDI4-5432L-5CCT-BLK (100% Down / 0% Up)

Luminaire Data

Description	4' Linear direct/indirect Lumen/kelvin select
Total Lumens	4,903
Input Wattage	42
Efficacy (lm/W)	117
Spacing Criterion (0-180°)	1.22
Spacing Criterion (90-270°)	1.18

Photometric based on 2700k and highest lumen setting

Zonal Lumen Summary

Zone	Lumens	%Fixt	Zone	Lumens	%Fixt
0-20°	677	13.8%	60-80°	889	18.1%
0-30°	1,418	28.9%	70-80°	320	6.5%
0-40°	2,287	46.6%	80-90°	85	1.7%
0-60°	3,929	80.1%	90-110°	0	0.0%
0-80°	4,818	98.3%	90-120°	0	0.0%
0-90°	4,903	100.0%	90-130°	0	0.0%
10-90°	4,726	96.4%	90-150°	0	0.0%
20-40°	1,610	32.8%	90-180°	0	0.0%
20-50°	2,485	50.7%	110-180°	0	0.0%
40-70°	2,212	45.1%	0-180°	4,903	100.0%

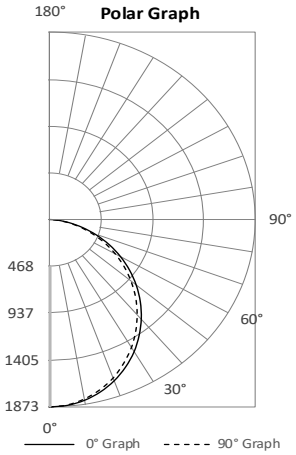

ALDI4-5432L-5CCT-BLK (70% Down / 30% Up)

Luminaire Data

Description	4' Linear direct/indirect Lumen/kelvin select
Total Lumens	4,842
Input Wattage	42
Efficacy (lm/W)	115
Spacing Criterion (0-180°)	1.22
Spacing Criterion (90-270°)	1.18

Photometric based on 2700k and highest lumen setting

Zonal Lumen Summary

Zone	Lumens	%Fixt	Zone	Lumens	%Fixt
0-20°	462	9.5%	60-80°	605	12.5%
0-30°	968	20.0%	70-80°	217	4.5%
0-40°	1,560	32.2%	80-90°	56	1.2%
0-60°	2,680	55.4%	90-110°	89	1.8%
0-80°	3,285	67.8%	90-120°	255	5.3%
0-90°	3,342	69.0%	90-130°	490	10.1%
10-90°	3,221	66.5%	90-150°	1,043	21.5%
20-40°	1,098	22.7%	90-180°	1,500	31.0%
20-50°	1,695	35.0%	110-180°	1,411	29.1%
40-70°	1,508	31.1%	0-180°	4,842	100.0%

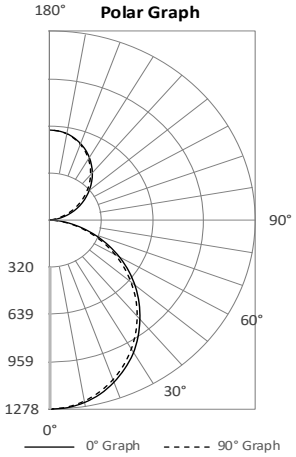

ALDI4-5432L-5CCT-BLK (50% Down / 50% Up)

Luminaire Data

Description	4' Linear direct/indirect Lumen/kelvin select
Total Lumens	4,761
Input Wattage	42
Efficacy (lm/W)	112
Spacing Criterion (0-180°)	N.A.
Spacing Criterion (90-270°)	N.A.

Photometric based on 2700k and highest lumen setting

Zonal Lumen Summary

Zone	Lumens	%Fixt	Zone	Lumens	%Fixt
0-20°	317	6.7%	60-80°	414	8.7%
0-30°	664	14.0%	70-80°	148	3.1%
0-40°	1,071	22.5%	80-90°	38	0.8%
0-60°	1,839	38.6%	90-110°	150	3.1%
0-80°	2,252	47.3%	90-120°	424	8.9%
0-90°	2,290	48.1%	90-130°	812	17.1%
10-90°	2,207	46.4%	90-150°	1,720	36.1%
20-40°	754	15.8%	90-180°	2,471	51.9%
20-50°	1,163	24.4%	110-180°	2,322	48.8%
40-70°	1,033	21.7%	0-180°	4,761	100.0%

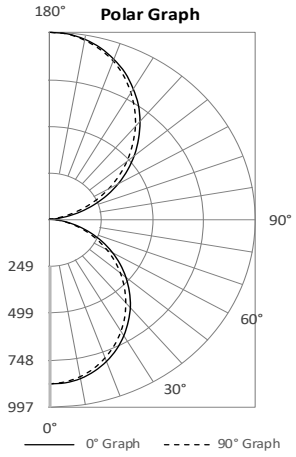

Warranty

Americanlite® is pleased to provide a 5 year limited warranty covering the fixtures and lamps in this catalogue. Americanlite® warrants that the fixtures comply with Americanlite®'s published specifications and are free from defects in materials and workmanship.

All our equipment is CE, TUV, FCC or UL approved and manufactured with approved components. Americanlite® reserves the right to change or improve the design or components of any of its products due to parts availability or changes in standards, without assuming any obligation to modify any product previously manufactured and without notice. All equipment is tested and inspected before shipment.

This warranty is void if the product is operated outside of its normal operating conditions. The foregoing warranty does not apply to failures caused by acts of God or as a result of any abuse, misuse, abnormal use, or use in violation of any applicable standard, code or instructions for use in installations, including, but not limited to, those contained in the Standards for the International Electrotechnical Commission. Americanlite® reserves and has the right to examine failed ballast to determine the cause of failure, excessive lumen depreciation and patterns of usage.